WHISTLER

RESORT MUNICIPALITY OF WHISTLER

RAINBOW PARK PUMP STATION

CONTRACT No. 179.75.1

Dayton & Knight Ltd.
CONSULTING ENGINEERS
#210-889 HARBOURSIDE DRIVE, NORTH VANCOUVER, B.C.
TEL. (604) 990-4800 WWW.DAYTON-KNIGHT.COM
FAX (604) 990-4805

RECORD DRAWINGS

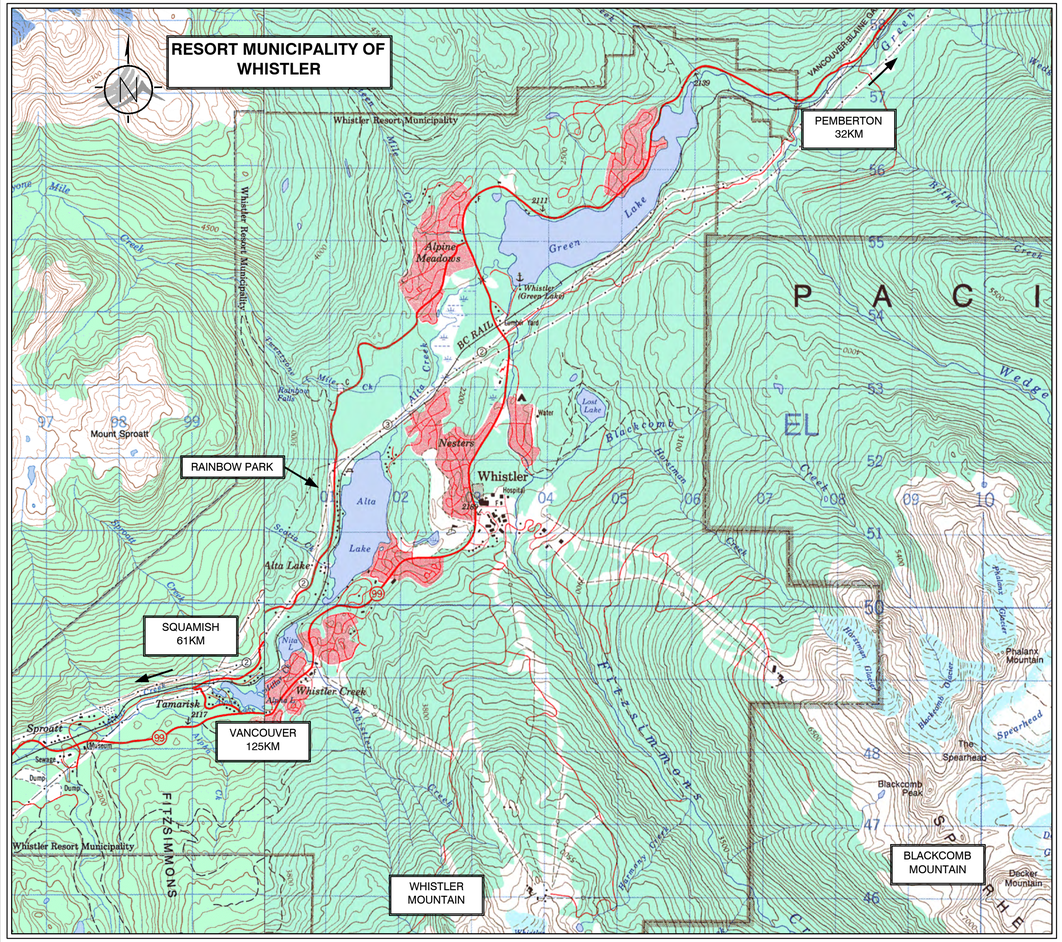

KEY PLAN
NTS

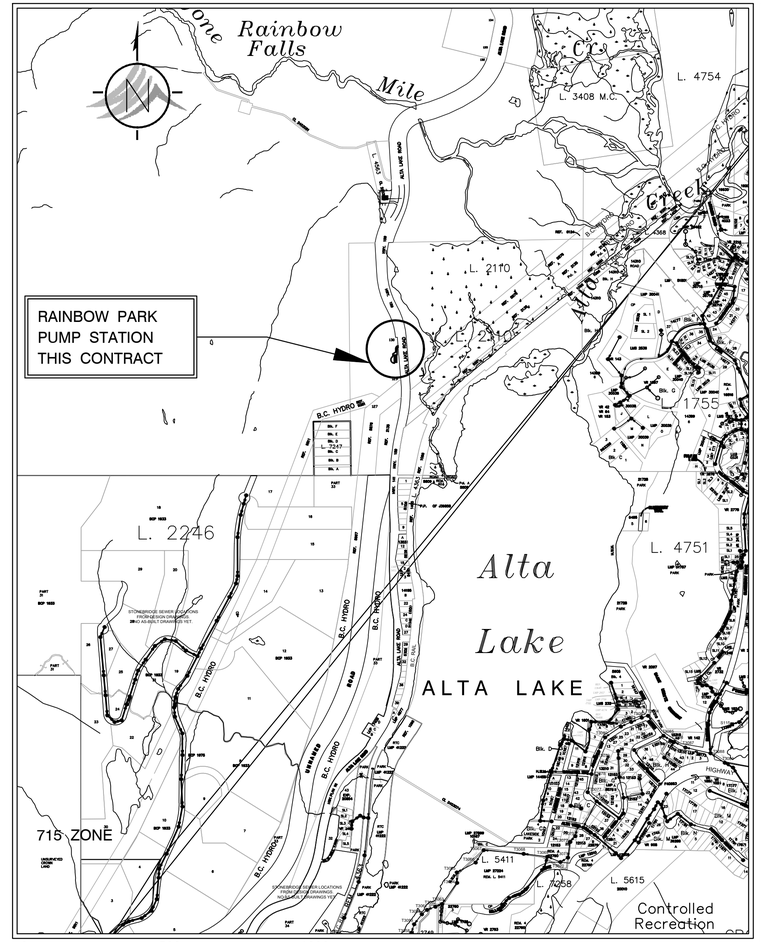

AREA PLAN
1:10000

INDEX TO DRAWINGS (TOTAL DWGS. = 61)

SHEET No.	TITLE
	GENERAL
G1	KEY PLAN - AREA PLAN - INDEX TO DRAWINGS
G2	SITE LAYOUT
G3	SITE GRADING AND EARTHWORKS
G4	SITE SECTIONS
G5	ROAD PROFILE, TYPICAL ROAD SECTIONS, DETAILS
G6	OUTSIDE PIPING
G7	OUTSIDE PIPING PROFILES
G8 - G9	DETAILS
G10	WATER WELL DETAILS
	PROCESS AND INSTRUMENTATION
P1	P&ID STANDARD TAGS AND ABBREVIATIONS
P2	P&ID STANDARD SYMBOLS, EQUIPMENT, VALVES AND INSTRUMENTATION
P3	PROCESS AND INSTRUMENTATION - OVER VIEW
P4	PROCESS AND INSTRUMENTATION - GROUNDWATER WELLS
P5	PROCESS AND INSTRUMENTATION - HIGH LIFT PUMPS
P6	PROCESS AND INSTRUMENTATION - DISCHARGE PIPINGS
P7	PROCESS AND INSTRUMENTATION - CHLORINE GENERATION SYSTEM
P8	PROCESS AND INSTRUMENTATION - CHLORINE PUMPING SYSTEM
	ARCHITECTURAL
A1 - A11	ARCHITECTURAL
	STRUCTURAL
S1	GENERAL CONSTRUCTION NOTES
S2	GENERAL STRUCTURAL DETAILS
S3	GENERAL STRUCTURAL AND MASONRY DETAILS
S4	STRUCTURAL - FLOOR PLAN @ EL. 648.80 - DETAILS
S5	STRUCTURAL - FLOOR PLAN @ EL. 652.00 - DETAILS
S6	STRUCTURAL - ROOF PLAN
S7-S8	STRUCTURAL - SECTIONS - DETAILS
S9	REINFORCING - PLAN - SECTION
S10	REINFORCING - SECTIONS
S11	REINFORCING - SECTIONS
S12	REINFORCING - SECTION - DETAIL
	MECHANICAL
M1	MECHANICAL - PLAN - MECHANICAL ROOM
M2 - M3	MECHANICAL - SECTIONS
M4	MECHANICAL - OVERALL PLAN - DETAILS
M5	MECHANICAL - SECTION - DETAILS
M6	MECHANICAL - DETAILS
M7	MECHANICAL - WELL PUMP
	HEATING AND VENTILATING
V1	HEATING AND VENTILATING - PLAN
V2	HEATING AND VENTILATING - LEGEND AND MISCELLANEOUS DETAILS
	ELECTRICAL
E1	ELECTRICAL SITE LAYOUT
E2	WELL PUMP ELECTRICAL POWER
E3	MCC LAYOUT AND SINGLE LINE DIAGRAM
E4	DRIVE SCHEMATICS
E5	PLC I/O AND CONTROL POWER DIAGRAM
E6	PLC I/O
E7	PLC I/O AND LAYOUT
E8	POWER AND CONTROL LAYOUT
E9	POWER AND CONTROL SCHEDULE
E10	UTILITY AND LIGHTING LAYOUT
E11	DISTRIBUTION PANEL SCHEMATIC AND MISCELLANEOUS DETAILS

GENERAL NOTES:

1. ALL ELEVATIONS ARE GEODETIC AND BASED ON THE SURVEY MONUMENT GCM# 150359.
2. ALL UNDERGROUND UTILITIES INCLUDING WATER, STORM, GAS, CABLE, TELEPHONE AND ELECTRICAL AS SHOWN ON THESE PLANS ARE FOR INFORMATION ONLY. NO RESPONSIBILITY IS IMPLIED OR ASSUMED BY THE RMOW OR DAYTON AND KNIGHT LTD. AS TO THEIR LOCATION OR OMISSIONS.
3. THE CONTRACTOR SHALL NOTIFY THE VARIOUS UTILITY AGENCIES FOR ON–SITE INFORMATION AS TO THE ACTUAL LOCATION PRIOR TO THE START OF CONSTRUCTION.
4. THE CONTRACTOR SHALL BE RESPONSIBLE FOR TRAFFIC CONTROL IN ACCORDANCE WITH THE LATEST EDITION OF TRANSPORTATION ASSOCIATION OF CANADA.
5. THE CONTRACTOR SHALL BE RESPONSIBLE FOR SITE SAFETY AND SHALL BE THE "PRINCIPAL CONTRACTOR" AS DEFINED BY THE WORKERS COMPENSATION ACT AND REGULATIONS.
6. THE CONTRACTOR SHALL COMPLY WITH ALL ENVIRONMENTAL REQUIREMENTS AS DEFINED BY THE CONTRACT DOCUMENTS AND IN ACCORDANCE WITH THE GUIDELINES FOR LAND DEVELOPMENT WORK WITHIN BRITISH COLUMBIA, ISSUED BY THE MINISTRY OF ENVIRONMENT.
7. ALL WATER VALVES SHALL ONLY BE OPERATED BY THE RMOW, THIS INCLUDES BOTH SUPPLY AND GRAVITY DISCHARGE PIPES. THE CONTRACTOR SHALL GIVE 48 HOURS NOTICE TO THE RMOW FOR REQUESTS TO OPERATE VALVES.
8. THE CONTRACTOR SHALL OBTAIN ALL NECESSARY PERMITS PRIOR TO CONSTRUCTION.
9. ALL CONNECTIONS TO THE RMOW WATER SYSTEM SHALL BE DONE IN THE PRESENCE OF A RMOW WATERWORKS STAFF. THE CONTRACTOR SHALL PROVIDE A MINIMUM 48 HOURS NOTICE TO THE RMOW PRIOR TO INSTALLING ANY CONNECTIONS.

"These Record Drawings have been prepared based on information provided by the Contractor and others. Dayton & Knight Ltd. has not verified the accuracy or completeness of the information provided to them and does not warrant the accuracy or completeness of these Record Drawings. Users of these Record Drawings assume all risk of loss resulting from their use."

RESORT MUNICIPALITY OF WHISTLER
RAINBOW PARK PUMP STATION
CONTRACT No. 179.75.1

WHISTLER

PLOT: FULL 1:1 HALF 1:2

AutoCAD DRAWING

REVISIONS	ISSUE	DATE	DRAWN	CHK'D	APP'D	DESCRIPTION
	A	MAY12/08	KS	WB	WB	ISSUED FOR TENDER
	B	JUL8/08	KS	WB	WB	ISSUED FOR CONSTRUCTION
	C	DEC15/09	AS	WB	WB	RECORD DRAWING

DESIGNED WB
DRAWN PTL
CHECKED WB

Dayton & Knight Ltd.
CONSULTING ENGINEERS
#210-889 HARBOURSIDE DR., NORTH VANCOUVER, B.C. V7P 3S1
TEL.: (604) 990-4800 FAX: (604) 990-4805 www.dayton-knight.com

RESORT MUNICIPALITY OF WHISTLER
RAINBOW PARK PUMP STATION
KEY PLAN – AREA PLAN – INDEX TO DRAWINGS

SCALE: AS SHOWN
DRAWING No. 179.75.1
SHEET No. G1 ISSUE C

FILE: P:\Redwg\WHISTLER\179-75-1\GENERAL\179-75-1 G1.dwg Tab G1 11-01-14 dchen

LAYOUT COORDINATES					
#	NORTHING	EASTING	#	NORTHING	EASTING
1	5,552,280.75	501,006.62	17	5552251.254	501002.776
2	5552280.317	501000.368	18	5552252.160	501002.727
3	5552266.177	500986.430	19	5552247.459	501001.897
4	5552246.930	500985.371	20	5552253.561	501001.634
5	5552222.643	500986.156	21	5552271.193	500999.919
6	5552227.060	500983.512	22	5552286.069	500997.996
7	5552222.562	500983.657	23	5552246.866	500983.372
8	5552222.884	500993.611			
9	5552255.340	500992.562			
10	5552258.483	500991.568			
11	5552261.038	500983.143			
12	5552252.064	500973.964			
13	5552252.037	500973.100			
14	5552246.539	500973.277			
15	5552249.419	500998.801			
16	5552250.297	500999.566			

NOTES:
1. LAYOUT COORDINATES AND DIMENSIONS FOR ROAD AND PARKING AREA (POINTS #6 – 14) ARE TO SHOULDER OF GRAVEL. ASPHALT SURFACE IS 0.5m OFFSET.

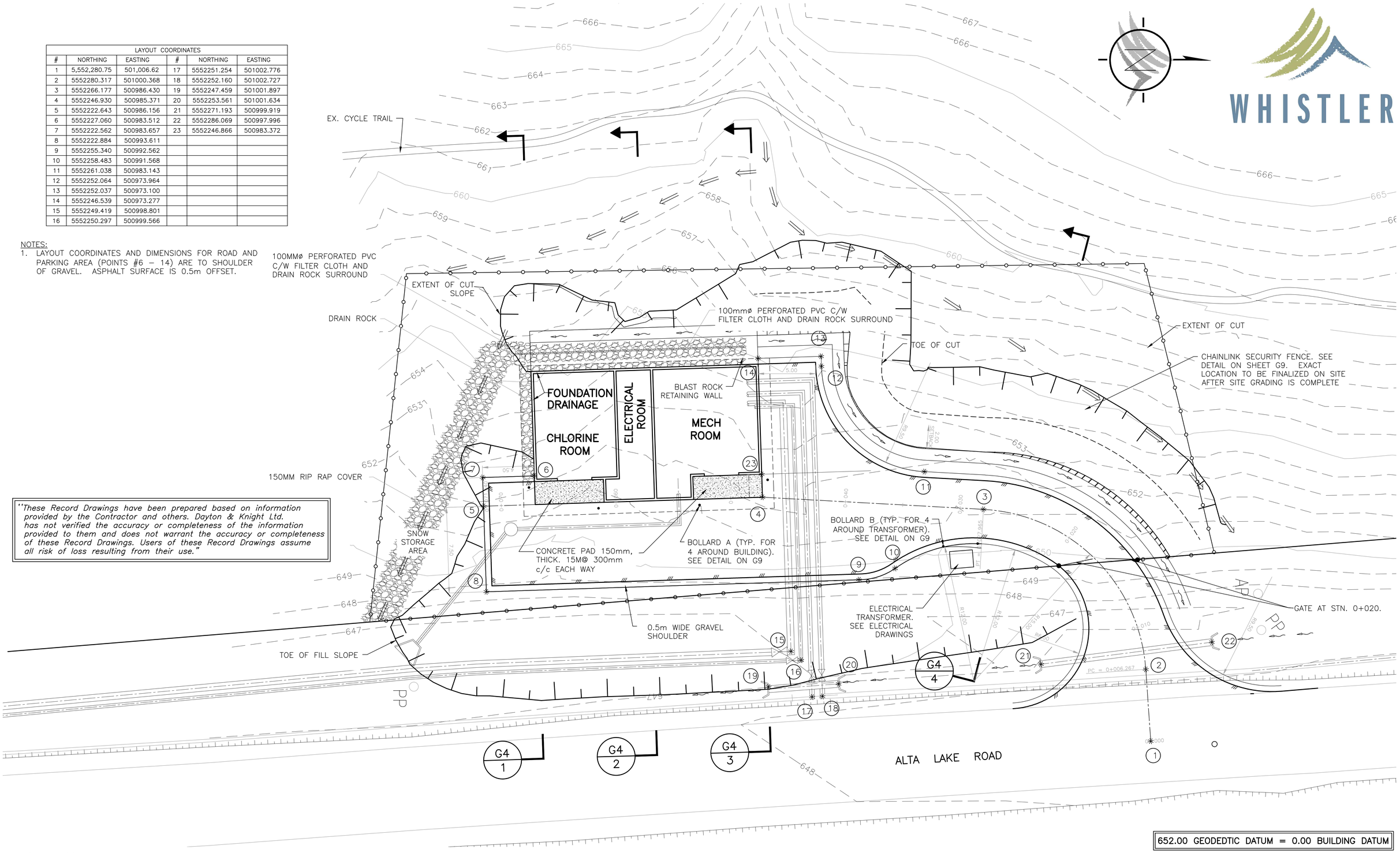

"These Record Drawings have been prepared based on information provided by the Contractor and others. Dayton & Knight Ltd. has not verified the accuracy or completeness of the information provided to them and does not warrant the accuracy or completeness of these Record Drawings. Users of these Record Drawings assume all risk of loss resulting from their use."

PLOT: FULL 1:1 HALF 1:2

FILE: P:\Recdwgs\WHISTLER\179-75-1\GENERAL\179-75-1 G2_G9 NO GENSET.dwg Tab Site Layout 11-01-14 dchen

AutoCAD DRAWING

REVISIONS	ISSUE	DATE	DRAWN	CHK'D	APP'D	DESCRIPTION	ISSUE	DATE	DRAWN	CHK'D	APP'D	DESCRIPTION
	A	MAY12/08	PW	PW	WB	ISSUED FOR TENDER	D	DEC16/09	AS	WB	WB	RECORD DRAWING
	B	JUN03/08	KS	WB	WB	2 ADDENDUM No. 2						
	C	JUL8/08	KS	WB	WB	ISSUED FOR CONSTRUCTION						

DESIGNED PW
DRAWN PW
CHECKED WB

Dayton & Knight Ltd.
CONSULTING ENGINEERS
#210-889 HARBOURSIDE DR., NORTH VANCOUVER, B.C. V7P 3S1
TEL.: (604) 990-4800 FAX: (604) 990-4805 www.dayton-knight.com

RESORT MUNICIPALITY OF WHISTLER
RAINBOW PARK PUMP STATION
SITE LAYOUT

SCALE: 1 : 150
DRAWING No. 179.75.1
SHEET No. G2 ISSUE D

NOTES:
1. FINISHED ELEVATIONS SHOWN ARE TOP OF GRAVEL AT THE SHOULDER OF GRAVEL.
2. EXTENT OF CUT AND FILL SLOPES SHOWN IS APPROXIMATE. ACTUAL EXTENTS TO BE DETREMINED AFTER ROCK SURFACE IS EXPOSED AND ROCK BLASTING AND EXCAVATION IS COMPELTE
3. OVERBURDEN SOIL CUT SLOPES SHOWN AT 1.5H:1V. SLOPES OF 2H:1V TO BE USED WHERE POSSIBLE. FINAL SLOPES TO BE DETERMINED FOLLOWING BLASTING.
4. ALL ROCK FACES TO BE INSPECTED BY THE GEOTECHNICAL ENGINEER FOLLOWING BLASTING.
5. LOCATION OF INTECEPTOR DITCH TO BE FINALISED ON SITE BY ENGINEER.

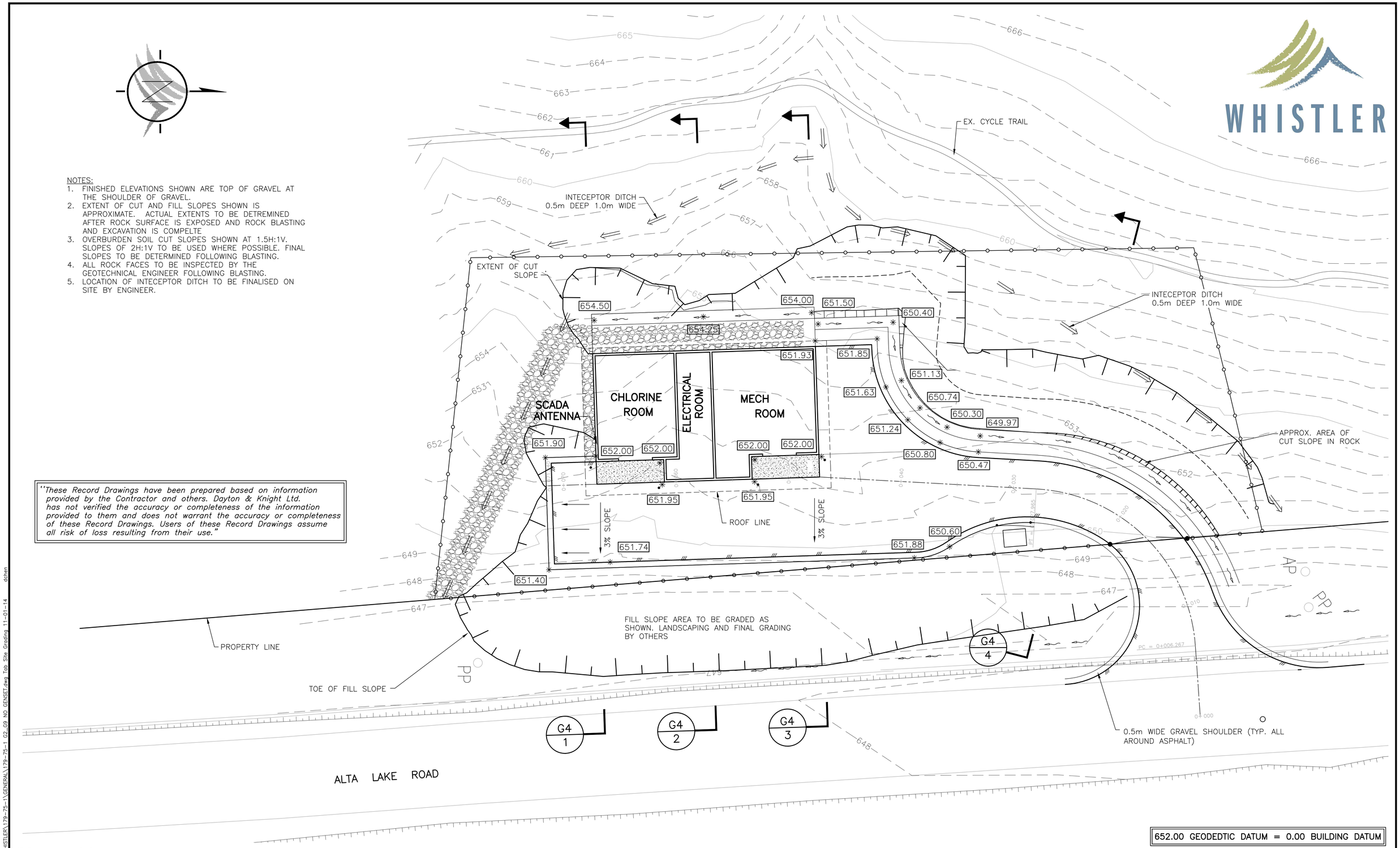

"These Record Drawings have been prepared based on information provided by the Contractor and others. Dayton & Knight Ltd. has not verified the accuracy or completeness of the information provided to them and does not warrant the accuracy or completeness of these Record Drawings. Users of these Record Drawings assume all risk of loss resulting from their use."

PLOT: FULL 1:1 HALF 1:2

FILE: P:\Recdwgs\WHISTLER\179-75-1\GENERAL\179-75-1 G2_G9 NO GENSET.dwg Tab Site Grading 11-01-14 dchen

AutoCAD DRAWING

REVISIONS	ISSUE	DATE	DRAWN	CHK'D	APP'D	DESCRIPTION	ISSUE	DATE	DRAWN	CHK'D	APP'D	DESCRIPTION
	A	MAY12/08	PW	PW	WB	ISSUED FOR TENDER	D	JUL29/08	KS	WB	WB	CCO#1
	B	JUN03/08	KS	WB	WB	2 ADDENDUM No. 2	E	DEC16/09	AS	WB	WB	RECORD DRAWING
	C	JUL8/08	KS	WB	WB	ISSUED FOR CONSTRUCTION						

DESIGNED PW
DRAWN PW
CHECKED WB

Dayton & Knight Ltd.
CONSULTING ENGINEERS
#210-889 HARBOURSIDE DR., NORTH VANCOUVER, B.C. V7P 3S1
TEL.: (604) 990-4800 FAX: (604) 990-4805 www.dayton-knight.com

RESORT MUNICIPALITY OF WHISTLER
RAINBOW PARK PUMP STATION
SITE GRADING & EARTHWORKS

SCALE: 1 : 150
DRAWING No. 179.75.1
SHEET No. G3 ISSUE E

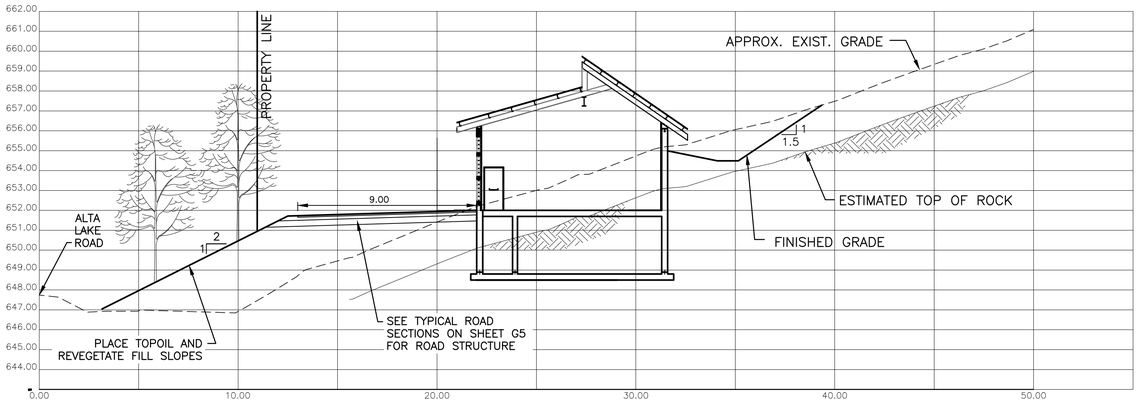

SECTION 1/G2 1/G3

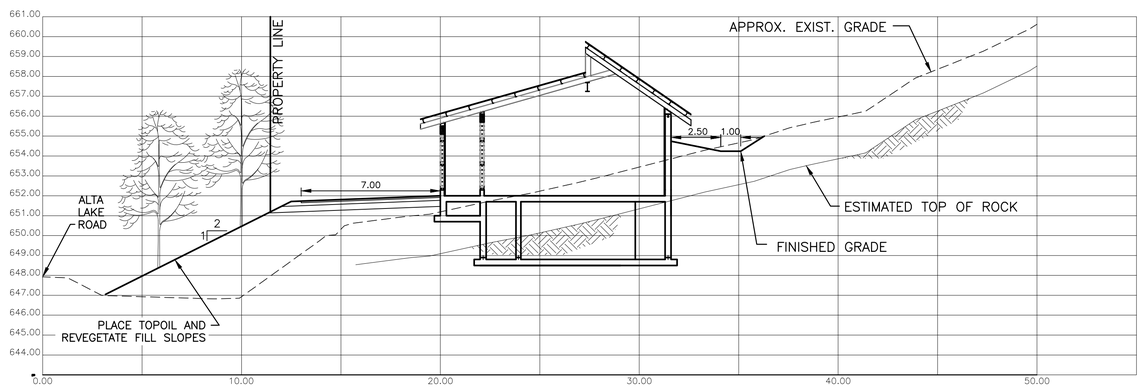

SECTION 3/G2 2/G2

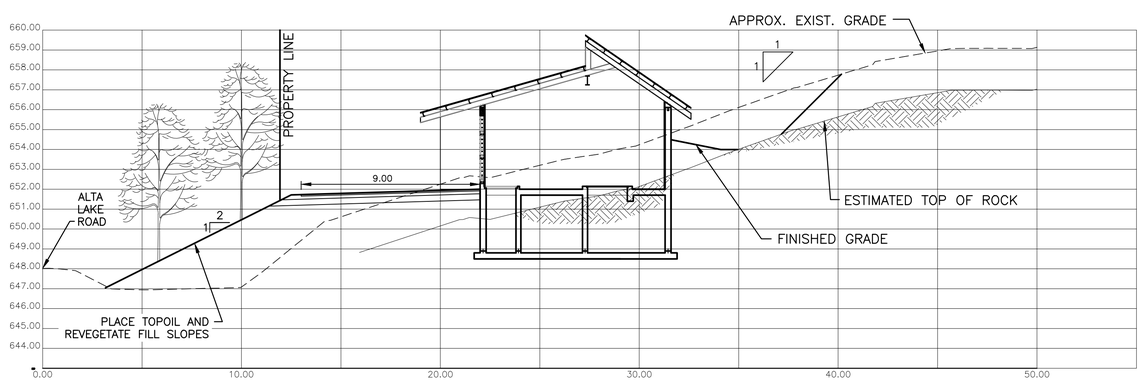

SECTION 3/G2 3/G3

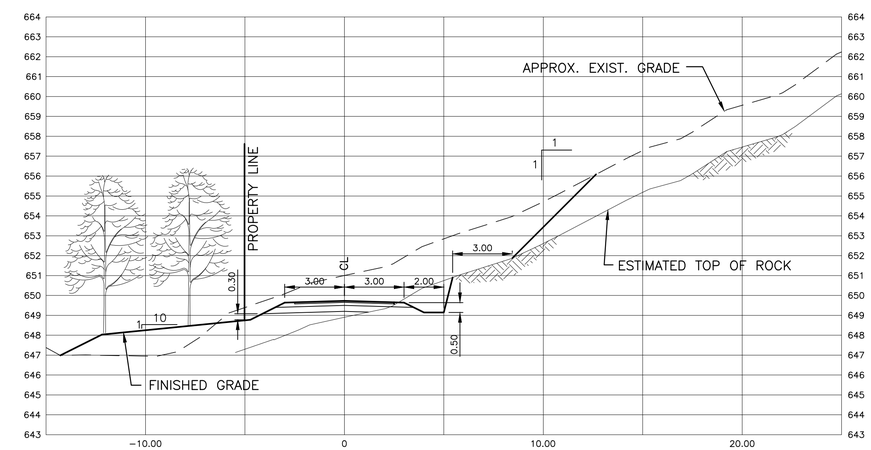

SECTION 4/G2 4/G3

"These Record Drawings have been prepared based on information provided by the Contractor and others. Dayton & Knight Ltd. has not verified the accuracy or completeness of the information provided to them and does not warrant the accuracy or completeness of these Record Drawings. Users of these Record Drawings assume all risk of loss resulting from their use."

PLOT: FULL 1:1 HALF 1:2

FILE: P:\Recdwgs\WHISTLER\179-75-1\GENERAL\179-75-1 G2_G9 NO GENSET.dwg Tab Site Sections 11-01-14 dchen

AutoCAD DRAWING

REVISIONS

ISSUE	DATE	DRAWN	CHK'D	APP'D	DESCRIPTION	ISSUE	DATE	DRAWN	CHK'D	APP'D	DESCRIPTION
A	MAY12/08	PW	PW	WB	ISSUED FOR TENDER	D	DEC16/09	AS	WB	WB	RECORD DRAWING
B	JUN03/08	KS	WB	WB	2 ADDENDUM No. 2						
C	JUL8/08	KS	WB	WB	ISSUED FOR CONSTRUCTION						

DESIGNED PW
DRAWN PW
CHECKED WB

Dayton & Knight Ltd.
CONSULTING ENGINEERS
#210-889 HARBOURSIDE DR., NORTH VANCOUVER, B.C. V7P 3S1
TEL.: (604) 990-4800 FAX: (604) 990-4805 www.dayton-knight.com

RESORT MUNICIPALITY OF WHISTLER
RAINBOW PARK PUMP STATION
SITE SECTIONS

SCALE: 1 : 150
DRAWING No. 179.75.1
SHEET No. G4 ISSUE D

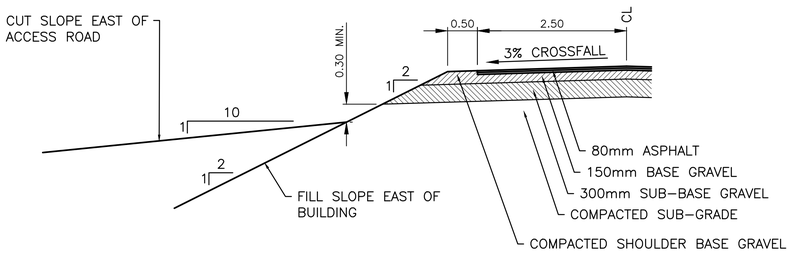

NOTE: CROSSFALL VARIES IN TURNING AND PARKING AREA. SEE SHEET G3 FOR GRADING IN THESE AREAS.

TYPICAL ROAD SECTION ON SOIL

SCALE: 1:50

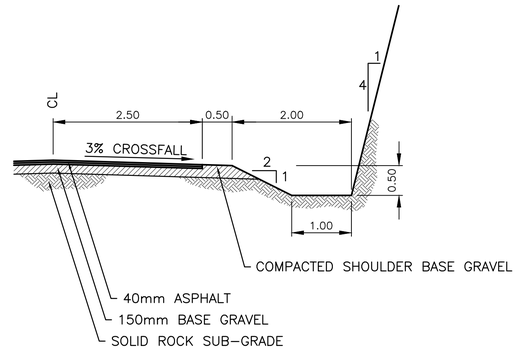

TYPICAL ROAD SECTION ON ROCK

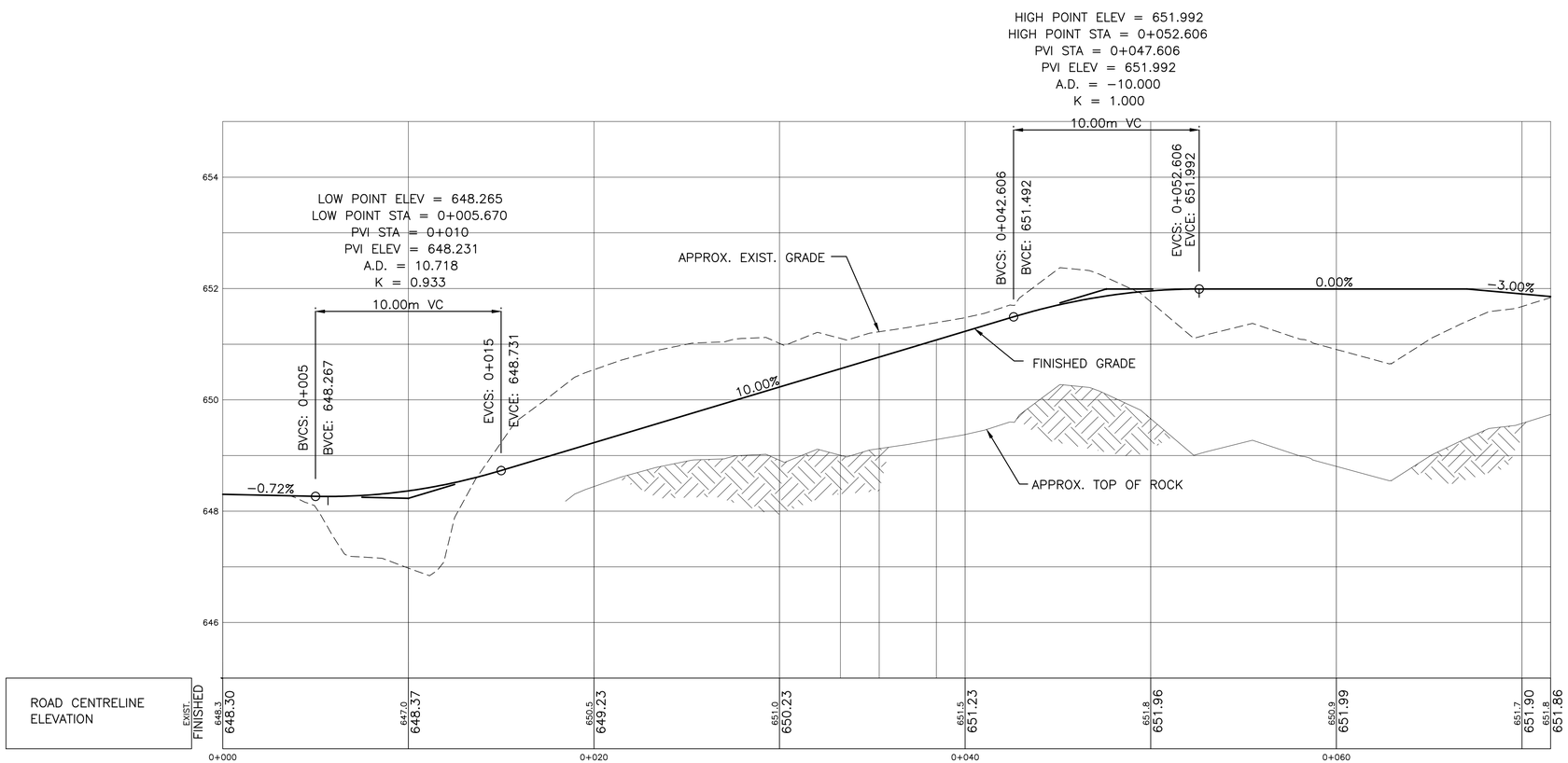

ROAD PROFILE

SCALE: H 1: 150 V 1:50

"These Record Drawings have been prepared based on information provided by the Contractor and others. Dayton & Knight Ltd. has not verified the accuracy or completeness of the information provided to them and does not warrant the accuracy or completeness of these Record Drawings. Users of these Record Drawings assume all risk of loss resulting from their use."

PLOT: FULL 1:1 HALF 1:2

FILE: P:\Recdwgs\WHISTLER\179-75-1\GENERAL\179-75-1 G2_G9 NO GENSET.dwg Tab Road Profile 11-01-14 dchen

AutoCAD DRAWING

REVISIONS	ISSUE	DATE	DRAWN	CHK'D	APP'D	DESCRIPTION	ISSUE	DATE	DRAWN	CHK'D	APP'D	DESCRIPTION
	A	MAY12/08	PW	PW	WB	ISSUED FOR TENDER						
	B	JUL8/08	KS	WB	WB	ISSUED FOR CONSTRUCTION						
	C	DEC16/09	AS	WB	WB	RECORD DRAWING						

DESIGNED PW
DRAWN PW
CHECKED WB

Dayton & Knight Ltd.
CONSULTING ENGINEERS
#210-889 HARBOURSIDE DR., NORTH VANCOUVER, B.C. V7P 3S1
TEL.: (604) 990-4800 FAX: (604) 990-4805 www.dayton-knight.com

RESORT MUNICIPALITY OF WHISTLER
RAINBOW PARK PUMP STATION
ROAD PROFILE, TYPICAL ROAD SECTIONS, DETAILS

SCALE: 1 : 250
DRAWING No. 179.75.1
SHEET No. G5 ISSUE C

NOTES:
1. INVERT OF EXISTING 400ø MAIN AT TIE-INS TO BE DETERMINED ON SITE PRIOR TO CONSTRUCTION OF MAINS.

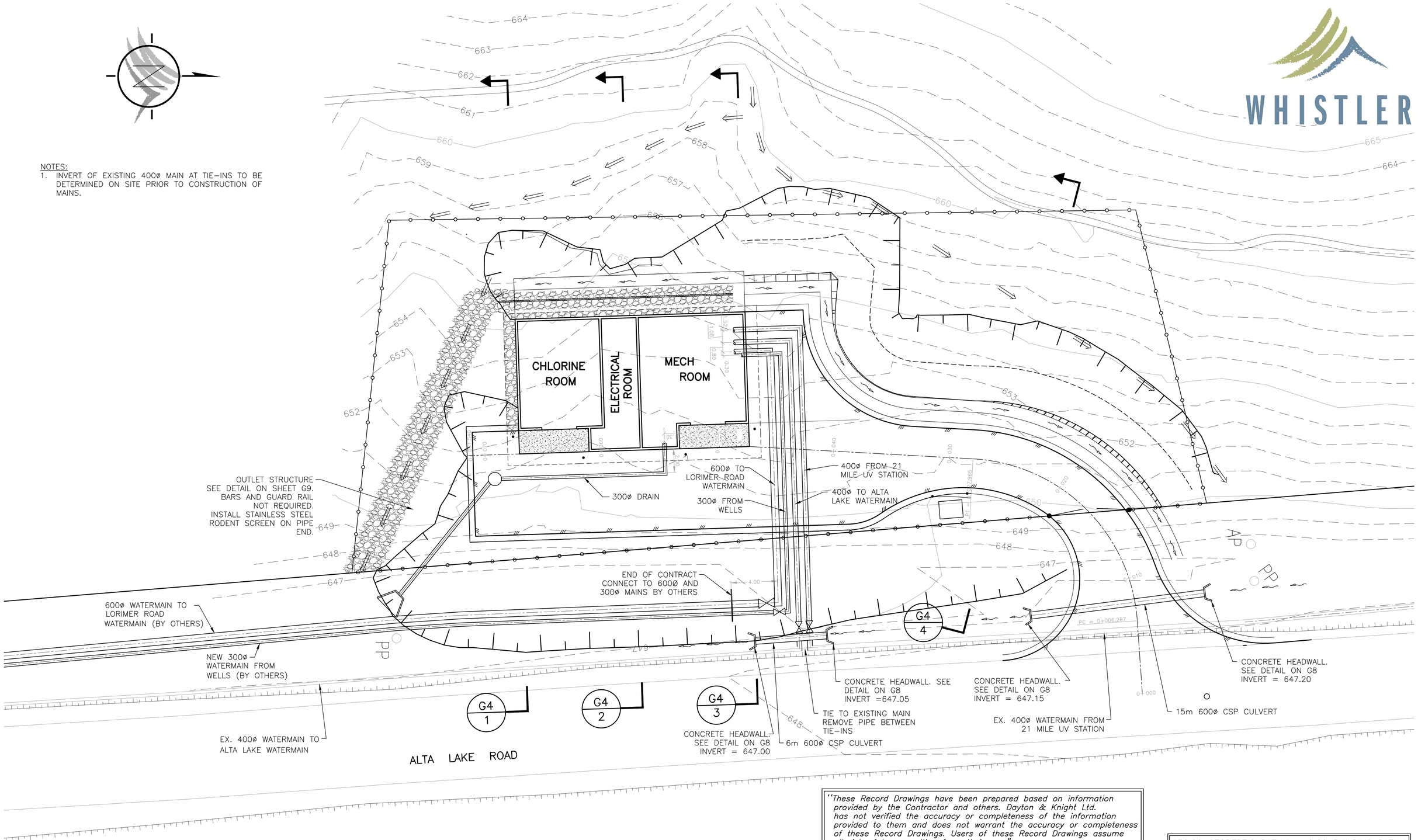

"These Record Drawings have been prepared based on information provided by the Contractor and others. Dayton & Knight Ltd. has not verified the accuracy or completeness of the information provided to them and does not warrant the accuracy or completeness of these Record Drawings. Users of these Record Drawings assume all risk of loss resulting from their use."

652.00 GEODEDTIC DATUM = 0.00 BUILDING DATUM

PLOT: FULL 1:1 HALF 1:2

FILE: P:\Recdwgs\WHISTLER\179-75-1\GENERAL\179-75-1 G2_G9 NO GENSET.dwg Tab: Outside Piping 11-01-14 dchen

AutoCAD DRAWING

REVISIONS

ISSUE	DATE	DRAWN	CHK'D	APP'D	DESCRIPTION	ISSUE	DATE	DRAWN	CHK'D	APP'D	DESCRIPTION
A	MAY12/08	PW	PW	WB	ISSUED FOR TENDER						
B	JUL8/08	KS	WB	WB	ISSUED FOR CONSTRUCTION						
C	DEC16/09	AS	WB	WB	RECORD DRAWING						

DESIGNED PW
DRAWN PW
CHECKED WB

Dayton & Knight Ltd.
CONSULTING ENGINEERS
#210-889 HARBOURSIDE DR., NORTH VANCOUVER, B.C. V7P 3S1
TEL.: (604) 990-4800 FAX: (604) 990-4805 www.dayton-knight.com

RESORT MUNICIPALITY OF WHISTLER
RAINBOW PARK PUMP STATION
OUTSIDE PIPING

SCALE: 1 : 150
DRAWING No. 179.75.1
SHEET No. G6 ISSUE C

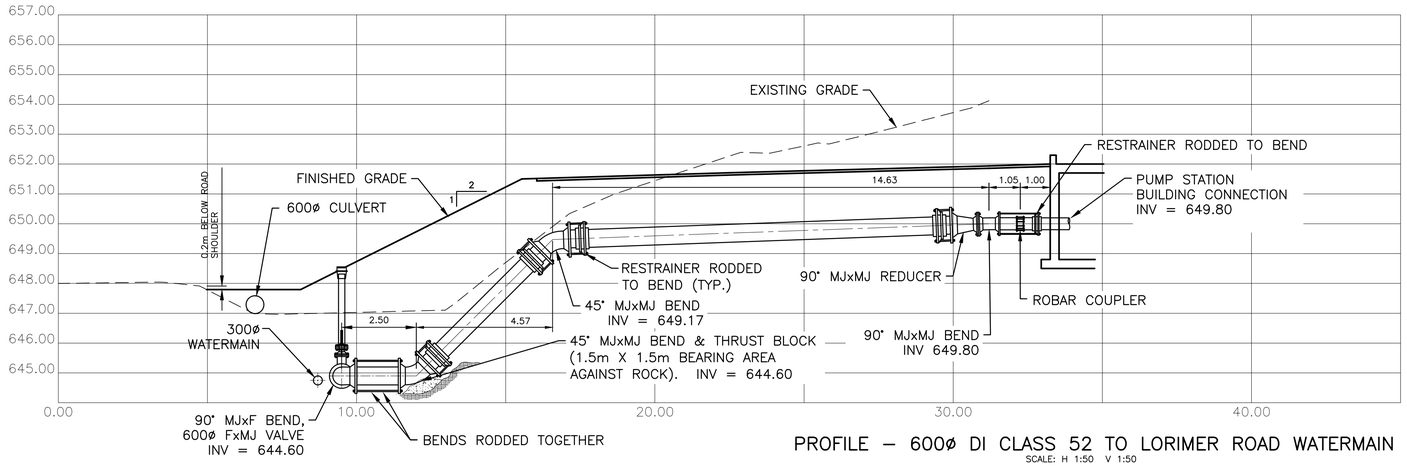

PROFILE – 600ø DI CLASS 52 TO LORIMER ROAD WATERMAIN

SCALE: H 1:50 V 1:50

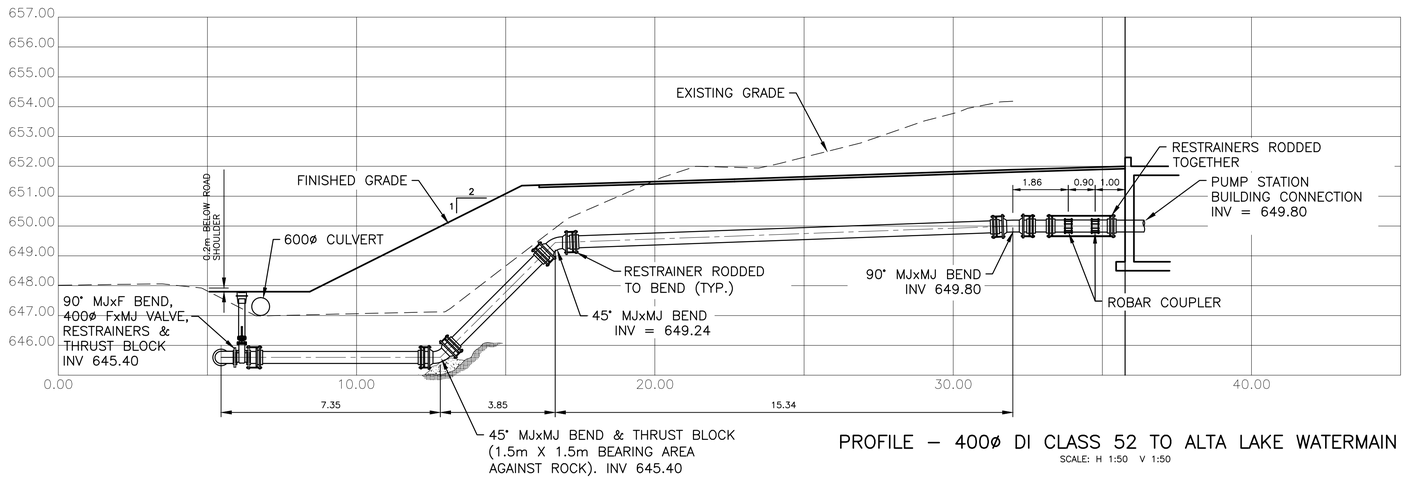

PROFILE – 400ø DI CLASS 52 TO ALTA LAKE WATERMAIN

SCALE: H 1:50 V 1:50

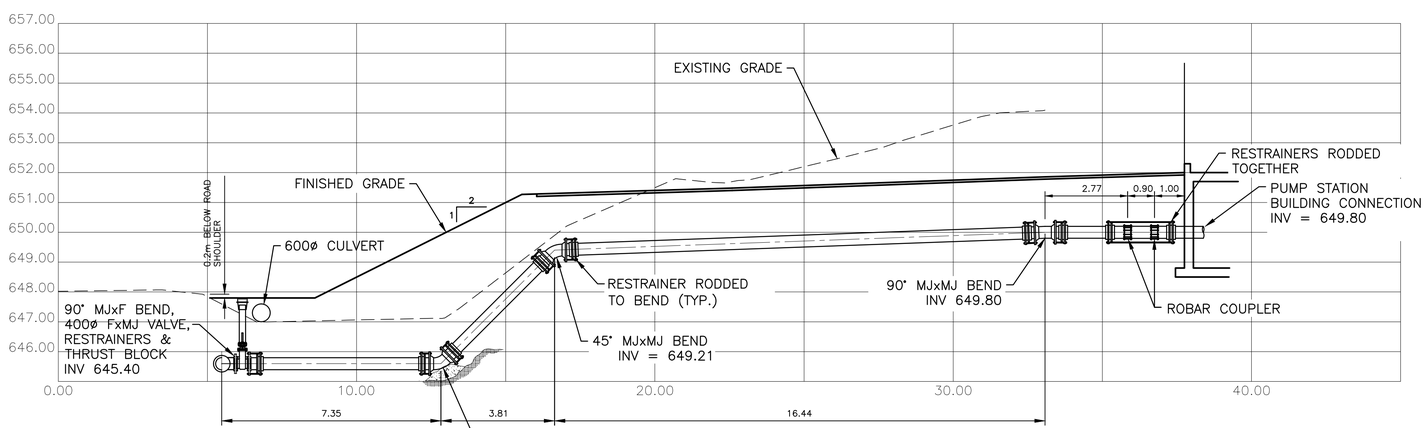

PROFILE – 400ø DI CLASS 52 FROM 21 MILE UV STATION

SCALE: H 1:50 V 1:50

"These Record Drawings have been prepared based on information provided by the Contractor and others. Dayton & Knight Ltd. has not verified the accuracy or completeness of the information provided to them and does not warrant the accuracy or completeness of these Record Drawings. Users of these Record Drawings assume all risk of loss resulting from their use."

652.00 GEODEDTIC DATUM = 0.00 BUILDING DATUM

FILE: P:\Recdwgs\WHISTLER\179-75-1\GENERAL\179-75-1 G2_G9 NO GENSET.dwg Tab: Piping Profiles 11-01-14 dchen

PLOT: FULL 1:1 HALF 1:2

AutoCAD DRAWING

REVISIONS	ISSUE	DATE	DRAWN	CHK'D	APP'D	DESCRIPTION	ISSUE	DATE	DRAWN	CHK'D	APP'D	DESCRIPTION
	B	MAY12/08	PW	PW	WB	ISSUED FOR TENDER						
	B	JUL8/08	KS	WB	WB	ISSUED FOR CONSTRUCTION						
	C	DEC16/09	AS	WB	WB	RECORD DRAWING						

DESIGNED PW
DRAWN PW
CHECKED WB

Dayton & Knight Ltd.
CONSULTING ENGINEERS
#210-889 HARBOURSIDE DR., NORTH VANCOUVER, B.C. V7P 3S1
TEL.: (604) 990-4800 FAX: (604) 990-4805 www.dayton-knight.com

RESORT MUNICIPALITY OF WHISTLER
RAINBOW PARK PUMP STATION
OUTSIDE PIPING PROFILES

SCALE: 1 : 100
DRAWING No. 179.75.1
SHEET No. G7 ISSUE C

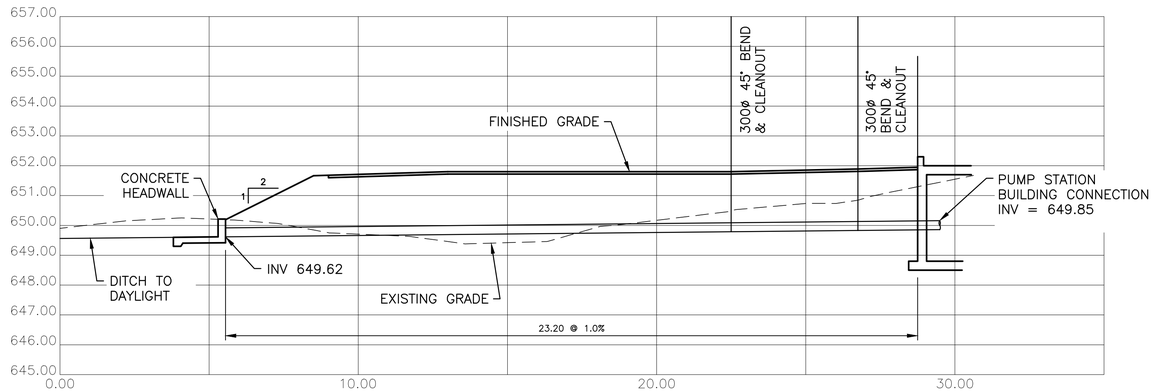

PROFILE – 300ø PVC DRAIN

SCALE: H 1:50 V 1:50

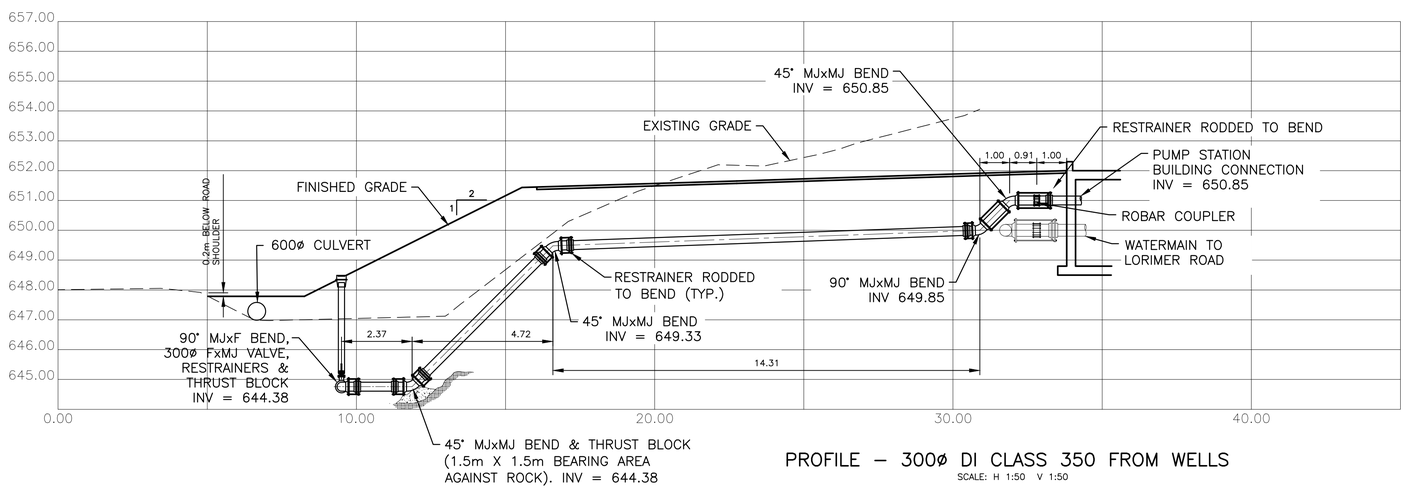

PROFILE – 300ø DI CLASS 350 FROM WELLS

SCALE: H 1:50 V 1:50

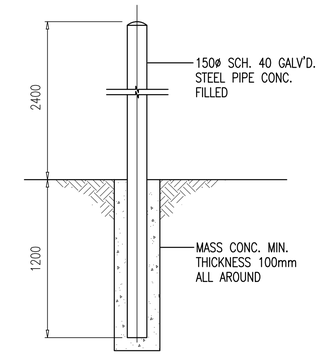

BOLLARD TYPE A DETAIL

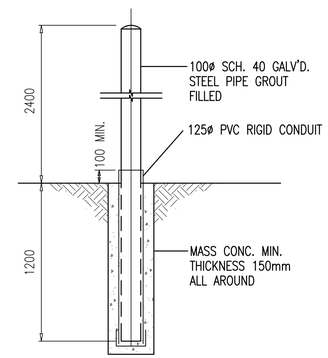

REFER TO BC HYDRO DRAWING ES54 U2-02

PROCEDURE

1. EXCAVATE AS SHOWN OR USE "SONOTUBE" FORMING
2. GLUE PLASTIC CAP TO PVC CONDUIT
3. POUR CONCRETE AROUND PVC CONDUIT
4. FILL THE PVC CONDUIT WITH A THIN MIX OF NON-SHRINK GROUT
5. PUSH STEEL PIPE INTO PVC CONDUIT
6. FILL THE STEEL PPE UP WITH GROUT AND FORM A CAP TO SHED WATER.

NOTES

1. PVC CAP SHALL BE GLUED TO PVC CONDUIT TO FORM A WATERPROOF JOINT
2. BOLLARDS SHALL BE PLACED SO AS NOT TO OBSTRUCT ANY DOORS NOR RESTRICT THE OPERATION OF THE UNIT
3. THE PVC CONDUIT AND CAP MUST BE INSTALLED TO INSULATE THE PIPE AND PREVENT TRANSFER OF DANGEROUS TOUCH POTENTILA IN THE EVENT OF A FAULT.

BOLLARD TYPE B DETAIL

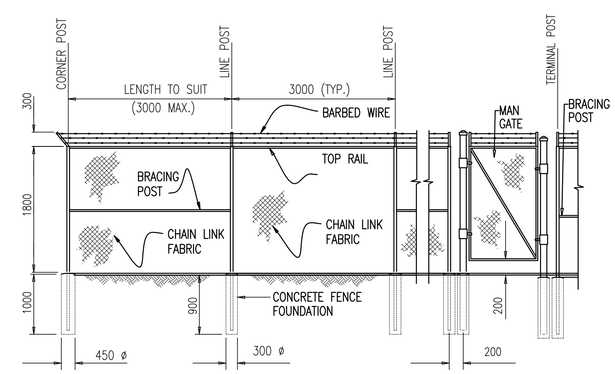

CHAINLINK FENCE DETAIL

NOTE: POST AND MESH TO BE BLACK.

"These Record Drawings have been prepared based on information provided by the Contractor and others. Dayton & Knight Ltd. has not verified the accuracy or completeness of the information provided to them and does not warrant the accuracy or completeness of these Record Drawings. Users of these Record Drawings assume all risk of loss resulting from their use."

PLOT: FULL 1:1 HALF 1:2

REVISIONS	ISSUE	DATE	DRAWN	CHK'D	APP'D	DESCRIPTION	ISSUE	DATE	DRAWN	CHK'D	APP'D	DESCRIPTION
	A	MAY12/08	PW	PW	WB	ISSUED FOR TENDER						
	B	JUL8/08	KS	WB	WB	ISSUED FOR CONSTRUCTION						
	C	DEC16/09	AS	WB	WB	RECORD DRAWING						

AutoCAD DRAWING

DESIGNED
DRAWN PW
CHECKED WB

Dayton & Knight Ltd.
CONSULTING ENGINEERS
#210-889 HARBOURSIDE DR., NORTH VANCOUVER, B.C. V7P 3S1
TEL.: (604) 990-4800 FAX: (604) 990-4805 www.dayton-knight.com

RESORT MUNICIPALITY OF WHISTLER
RAINBOW PARK PUMP STATION
OUTSIDE PIPING PROFILES
DETAILS

SCALE: NOT TO SCALE
DRAWING No. 179.75.1
SHEET No. G8 ISSUE C

FILE: P:\Recdwgs\WHISTLER\179-75-1\GENERAL\179-75-1 G2_G9 NO GENSET.dwg Tab: Piping Profiles & Details 11-01-14 dchen

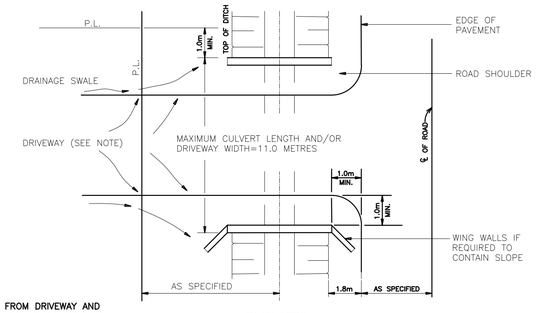

PLAN VIEW

NOTE:

ALL DRAINAGE FROM DRIVEWAY AND PRIVATE PROPERTY TO BE DIRECTED TO DITCH BY CROWN AND/OR SWALE. NO DRAINAGE TO STREET.

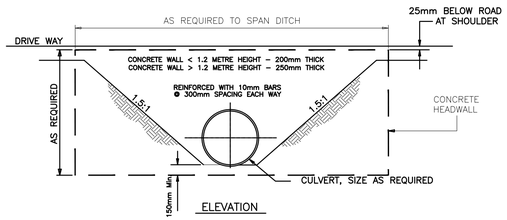

ELEVATION

DRIVEWAY CULVERT & HEADWALL

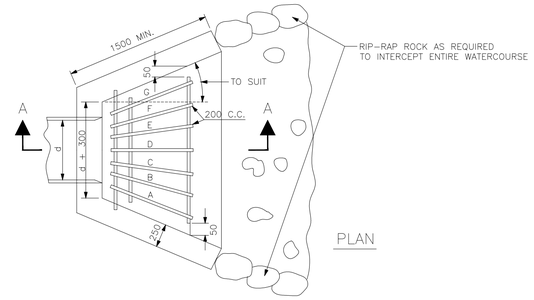

PLAN

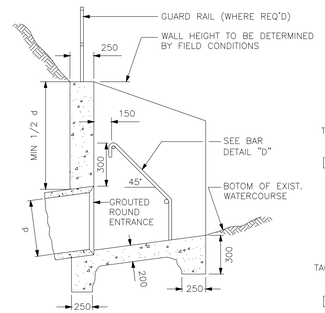

SECTION A–A

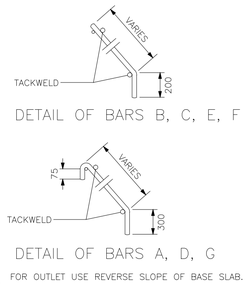

DETAIL OF BARS B, C, E, F

DETAIL OF BARS A, D, G

NOTE: FOR OUTLET USE REVERSE SLOPE OF BASE SLAB.

STANDARD ENTRANCE/OUTLET HEADWALL

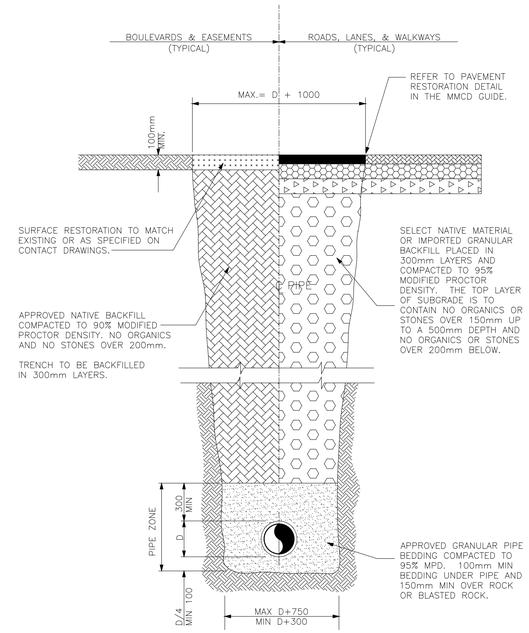

NOTES:

1. "D" = OUTSIDE DIAMETER OF THE PIPE AT ITS LARGEST SECTION.
2. TRENCHING TO COMPLY WITH ALL REQUIREMENTS OF THE WCB.

TYPICAL TRENCH SECTION

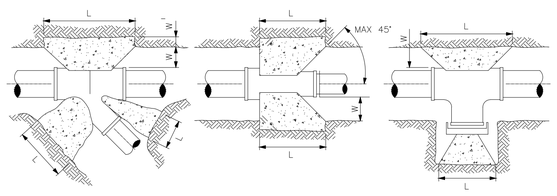

WYE — REDUCER OR LINE VALVE — TEE WITH PLUG

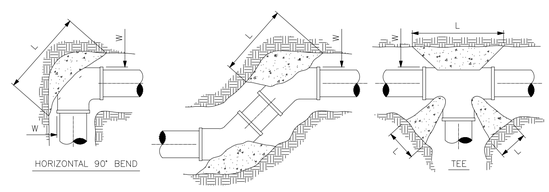

HORIZONTAL 90° BEND — HORIZONTAL 45° BEND — TEE

TABLE 1. MINIMUM THRUST AREAS

NOTE: ALL DIMENSIONS IN MILLIMETERS *DIMENSIONS APPLY TO THE LARGER DIA. OF FITTING

MINIMUM THRUST AREAS FOR FITTINGS AT 150 psi PRESSURE AND FOR SOILS WITH MIN. BEARING OF 9.75 t/m² (NOT TO BE USED FOR SOFT CLAY, MUCK, PEAT, etc.).

TYPE OF FITTING	FITTING SIZE	OUTSIDE OF FITTING TO BEARING FACE	RECESS IN TRENCH WALL	LENGTH	HEIGHT	TYPE OF FITTING	FITTING SIZE	OUTSIDE OF FITTING TO BEARING FACE	RECESS IN TRENCH WALL	LENGTH	HEIGHT
	D	W	W'	L	H		D	W	W'	L	H
90° BEND	150	300		900	450	CROSS	150	300		600	450
	200	350		1050	600		200	350		750	600
	250	375		1450	750		250	375		1000	750
	300	400		1650	900		300	400		1200	900
45° BEND	150	300		450	450	45° WYE	150	300	300	450	450
	200	350		600	600		200	350	400	600	600
	250	375		750	750		250	375	500	750	750
	300	400		900	900		300	400	600	900	900
22 1/2° BEND	150	300		450	225	REDUCER	150	300	150	450	450
	200	350		600	300		200	350	200	600	600
	250	375		825	450		250	375	250	750	750
	300	400		900	450		300	400	300	900	900
TEE	150	300		600	450	CAPS AND PLUGS (IF NOT BOLTED)	150	300		450	450
	200	350		750	600		200	350		600	600
	250	375		1000	750		250	375		750	750
	300	400		1200	900		300	400		900	900

NOTE:

1. REFER TO CONTRACT DRAWINGS FOR SPECIFIED BEARING AREAS OF THRUST BLOCKS AND/OR SPECIFIC REQUIREMENTS NOT SHOWN ON THIS DRAWING.
2. PLACE 6 mil POLYETHYLENE ON INTERFACE BETWEEN CONCRETE AND FITTING.
3. PLACE 20 MPa CONCRETE AGAINST UNDISTURBED GROUND; KEEP CONCRETE CLEAR OF FITTING JOINTS.
4. SOILS AND CONDITIONS (WET) NOT MEETING MIN. BEARING OF 9.75 t/m ARE TO BE REFERRED TO ENGINEER.

TABLE 2. MINIMUM THRUST AREAS 600mm PIPE

MINIMUM THRUST AREAS FOR HORIZONTAL FITTINGS AT 2300 kPa PRESSURE AND FOR SOILS WITH MIN. BEARING OF 200 kPa (NOT TO BE USED FOR SOFT CLAY, MUCK, PEAT ETC.)

TYPE OF FITTING	FITTING SIZE	OUTSIDE OF FITTING TO BEARING FACE	LENGTH	HEIGHT	TYPE OF FITTING	FITTING SIZE	OUTSIDE OF FITTING TO BEARING FACE	LENGTH	HEIGHT
	D	W	L	H		D	W	H L	
11 1/4	600	500	900	1000		600	500	4500	1000
22.5	600	500	1800	1000					
45	600	500	3500	1000					
90	600	500	6500	1000					
TEE	600	500	4500	1000					
VERTICAL BENDS									
11 1/4	600	500	1500	1500	NOTE: ALL FITTINGS SHALL BE MECHANICAL JOINTS AND/OR HAVE THRUST BLOCKS AND ALSO BE RESTRAINED WHERE INDICATED ON THE DRAWINGS				
22.5	600	500	1500	1500					
45	600	500	1500	1500					
DIMENSIONS APPLY TO THE LARGER DIAMETER END OF FITTING.									

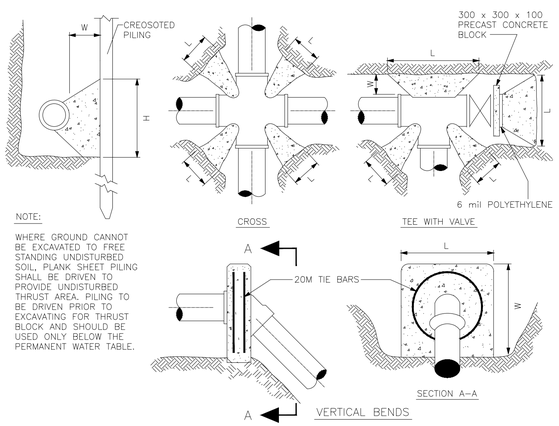

CROSS — TEE WITH VALVE — SECTION A–A — VERTICAL BENDS

NOTE:

WHERE GROUND CANNOT BE EXCAVATED TO FREE STANDING UNDISTURBED SOIL, PLANK SHEET PILING SHALL BE DRIVEN TO PROVIDE UNDISTURBED THRUST AREA. PILING TO BE DRIVEN PRIOR TO EXCAVATING FOR THRUST BLOCK AND SHOULD BE USED ONLY BELOW THE PERMANENT WATER TABLE.

THRUST BLOCK DETAILS

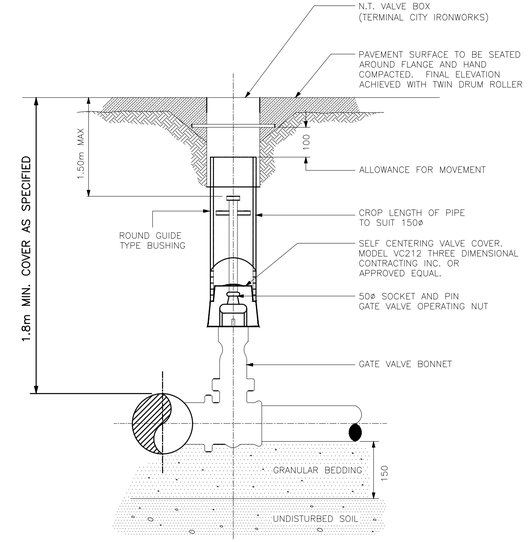

VALVE BOX ASSEMBLY

"These Record Drawings have been prepared based on information provided by the Contractor and others. Dayton & Knight Ltd. has not verified the accuracy or completeness of the information provided to them and does not warrant the accuracy or completeness of these Record Drawings. Users of these Record Drawings assume all risk of loss resulting from their use."

PLOT: FULL 1:1 HALF 1:2

FILE: P:\Recdwgs\WHISTLER\179-75-1\GENERAL\179-75-1 G2_G9 NO GENSET.dwg Tab Details 11-01-14 dchen

AutoCAD DRAWING

REVISIONS

ISSUE	DATE	DRAWN	CHK'D	APP'D	DESCRIPTION
A	MAY12/08	PW	PW	WB	ISSUED FOR TENDER
B	JUL8/08	KS	WB	WB	ISSUED FOR CONSTRUCTION
C	DEC16/09	AS	WB	WB	RECORD DRAWING

DESIGNED
DRAWN PW
CHECKED WB

Dayton & Knight Ltd.
CONSULTING ENGINEERS
#210-889 HARBOURSIDE DR., NORTH VANCOUVER, B.C. V7P 3S1
TEL.: (604) 990-4800 FAX: (604) 990-4805 www.dayton-knight.com

RESORT MUNICIPALITY OF WHISTLER
RAINBOW PARK PUMP STATION
DETAILS

SCALE: NOT TO SCALE
DRAWING No. 179.75.1
SHEET No. G9 ISSUE C

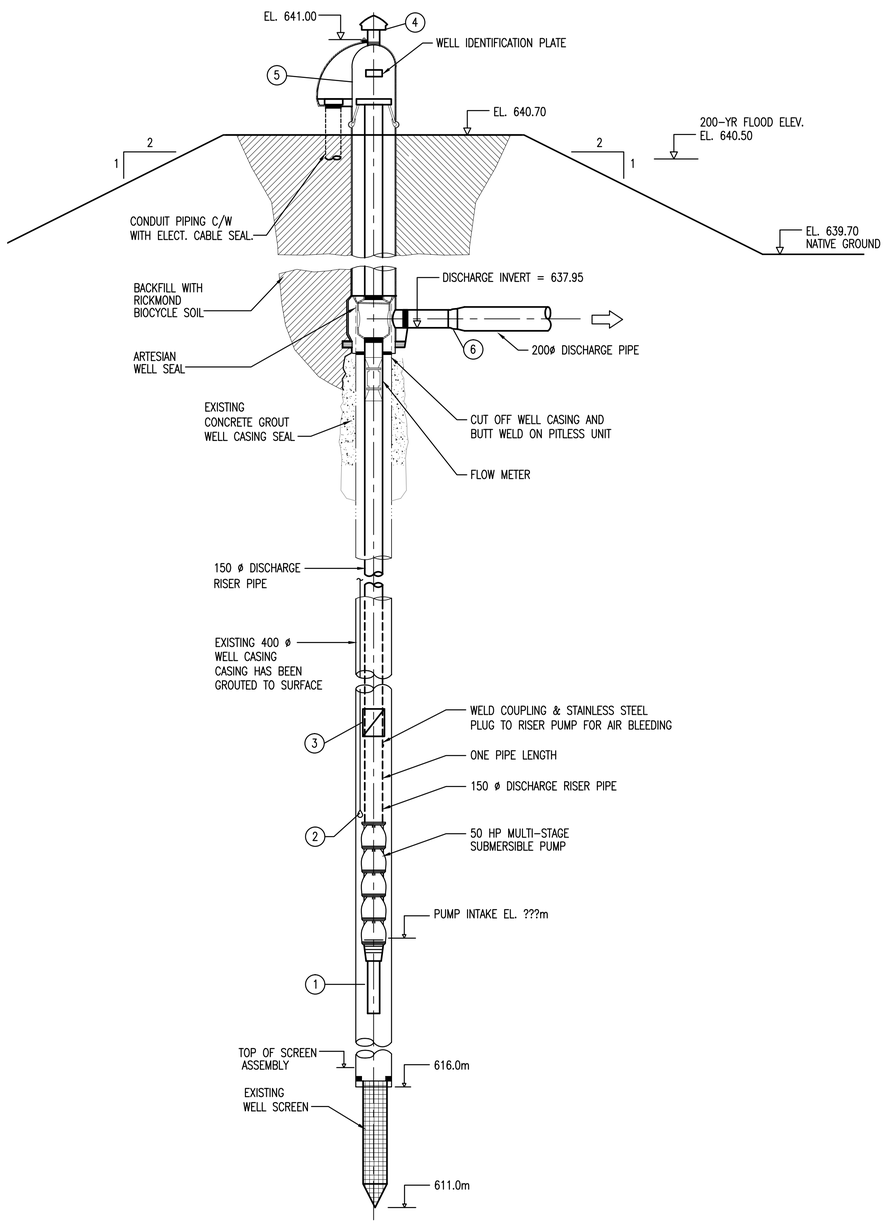

SECTION

400 ø WATER WELL

NTS

BILL OF MAJOR MATERIALS	
ITEM	DESCRIPTION
1	SUBMERSIBLE WELL PUMP
2	WELL LEVEL INDICATOR (PRESSURE TRANSMITTER)
3	150 POPPET TYPE CHECK VALVE
4	VENT
5	PITLESS UNIT FOR 400 WELL
6	1 – 150 MNPT x 200 (150#) FLG FAB CONCENTRIC INCREASER
7	1 – 200 150#FLG x 150 #FLG NRS GATE VALVE

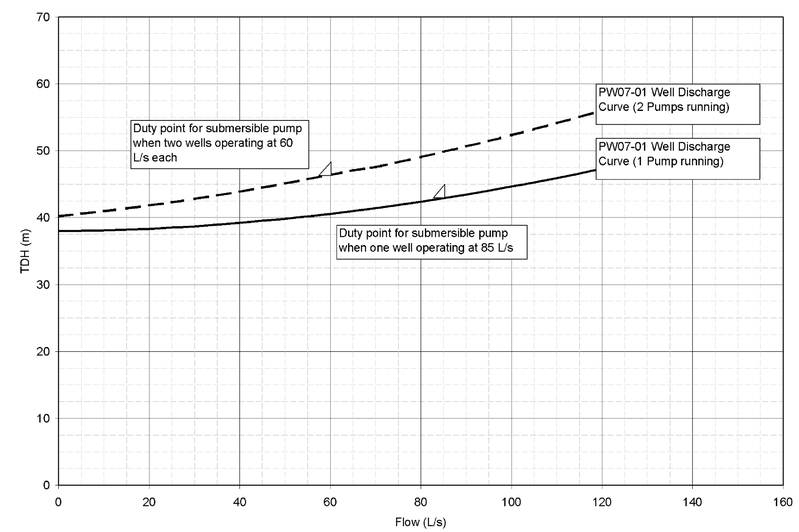

PUMP CURVE

"These Record Drawings have been prepared based on information provided by the Contractor and others. Dayton & Knight Ltd. has not verified the accuracy or completeness of the information provided to them and does not warrant the accuracy or completeness of these Record Drawings. Users of these Record Drawings assume all risk of loss resulting from their use."

WHISTLER

PLOT: FULL 1:50 HALF 1:100

FILE: P:\Recdwgs\WHISTLER\179-75-1\GENERAL\179-75-1 G10.dwg Tab: G10 11-01-14 dchen

AutoCAD DRAWING

REVISIONS	ISSUE	DATE	DRAWN	CHK'D	APP'D	DESCRIPTION	ISSUE	DATE	DRAWN	CHK'D	APP'D	DESCRIPTION
	A	MAY12/08	KS	WB	WB	ISSUED FOR TENDER						
	B	JUL8/08	KS	WB	WB	ISSUED FOR CONSTRUCTION						
	C	DEC15/09	AS	WB	WB	RECORD DRAWING						

DESIGNED WB
DRAWN KS
CHECKED WB

Dayton & Knight Ltd.
CONSULTING ENGINEERS
#210-889 HARBOURSIDE DR., NORTH VANCOUVER, B.C. V7P 3S1
TEL.: (604) 990-4800 FAX: (604) 990-4805 www.dayton-knight.com

RESORT MUNICIPALITY OF WHISTLER
LORIMER ROAD PIPELINE
WATER WELL DETAILS

SCALE: AS SHOWN
DRAWING No. 179.75.1
SHEET No. G10 ISSUE C

INSTRUMENT SYMBOLS

	CONTROL ROOM LOCATION ACCESSIBLE TO OPERATOR	CONTROL ROOM LOCATION INACCESSIBLE TO OPERATOR	LOCAL LOCATION ACCESSIBLE TO OPERATOR	LOCAL LOCATION INACCESSIBLE TO OPERATOR	FIELD LOCATED
DISCRETE INSTRUMENTS					
HMI FROM DISTRIBUTED CONTROL SYSTEM					
SCADA DISPLAY/ COMPUTER FUNCTION					
PROGRAMMABLE LOGIC CONTROLLER					

GENERAL NOTES

1. FADED SYMBOLS AND LINES REPRESENT EXISTING EQUIPMENT.
2. HATCHED EQUIPMENT AND LINES TO BE REMOVED.
3. FOR DETAILS OF INSTRUMENTATION LINES 1" OR LESS REFER TO INSTALLATION OR LOOP DIAGRAMS.
4. INSTRUMENTATION FOLLOWS ISA STANDARDS & PRACTICES 5.1, S5.2, S5.3, S5.4, S5.5.

FLOW UNITS

AIR:	m^3/HR
CHEMICALS:	kg PER DAY/ GRAMS PER LITRE/ LITRES PER SECOND
SEWERS:	LITRES PER SECOND
SOLIDS:	DRY METRIC TONNES PER DAY/ OR kg/D
WATER:	LITRES PER SECOND

*NOTE: NUMBERS INDICATE MAXIMUM FLOW FOR PIPE AND EQUIPMENT SIZING. CONTROL VALVES MAY BE SIZED FOR LESS.

EQUIPMENT GENERAL

AP – ACID METER PUMP
B – BLOWER
BP – CAUSTIC METER PUMP
CRN – O/H CRANE
CPS – COMPUTER
CON – CONVEYOR
CV – CHECK VALVE
CP – COMPRESSOR
EF – EXHAUST FAN
FC – FLUSHING CONNECTION
HE – HEAT EXCHANGER
M – MOTOR
MXR – MIXER
MCB – MASTER CONTROL BOARD
MCC – MOTOR CONTROL CENTRE
ME – MECHANICAL EQUIPMENT
MV – MOTORIZED VALVE
OMI – OPERATOR MACHINE INTERFACE
P – PUMP
PG – PRESSURE GAUGE
PLC – PROGRAMMABLE LOGIC CONTROLLER
PRV – PRESSURE REDUCING VALVE
SCB – SCRUBBER
SCC – SECONDARY CLARIFIER
SCRN – ROTATING SCREEN
SF – SUPPLY FAN
SG – SLIDE GATE
SLG – SLUICE GATE
SL – STOP LOG
SP – SLUDGE PUMP
SV – SOLENOID VALVE
TK – TANK
VA – VALVE
UP – UTILITY PUMP
VT – VENTURA–NOZZLE
WG – WEIR

PROCESS LINE TYPES

MAIN (OR NEW) PROCESS LINE
SECONDARY (OR EXISTING) PROCESS LINE
EXISTING PIPING AND EQUIPMENT
FUTURE PROCESS LINE
EXISTING PIPING AND EQUIPMENT TO BE REMOVED
OPEN CHANNEL (EXIST./NEW)

INSTRUMENT SIGNAL LINE TYPES

CAPILLARY TUBE OR FILLED SYSTEM SIGNAL LINE
ELECTRIC INSTRUMENT LINE – ANALOG
ELECTRIC INSTRUMENT LINE – DIGITAL (ASD DRIVE)
ELECTRIC INSTRUMENT SIGNAL (EXIST./NEW)
ELECTRIC OR ELECTRONIC INSTRUMENT SIGNAL WITH DIRECTION AS SHOWN, PROCESS TAPS
INTERNAL SYSTEM LINK (CPS, HMI)
INTERNAL SYSTEM LINK (ISL – SOFTWARE OR DATA)
PNEUMATIC INSTRUMENT SIGNAL
SPARE

INSTRUMENT FUNCTIONAL IDENTIFICATION LETTERS

	FIRST LETTERS (4)		SUCCEEDING LETTERS (3)		
	MEASURED OR INITIATING VARIABLE	MODIFIER	READOUT OR PASSIVE FUNCTION	OUTPUT FUCTION	MODIFIER
A	ANALYSIS		ALARM		
B	BURNER, COMBUSTION		UNCLASSIFIED	CLOSE–STOP DECREASE	UNCLASSIFIED
C	CONDUCTIVITY, pH (ACIDITY)		CLOSE	CONTROL OR CONTROLLER	
D	DENSITY, SPECIFIC GRAVITY	DIFFERENTIAL		OPEN–START–INCREASE	
E	VOLTAGE (EMF)		SENSOR (PRIMARY ELEMENT)		
F	FLOW RATE	RATIO (FRACTION)			FAIL
G	GAS, GAUGING (DIMENSIONAL)		GLASS, VIEWING DEVICE		
H	HAND, MANUAL				H–HIGH–(ALARM) HH–HIGH–(SHUTDOWN)
I	CURRENT (ELECTRICAL)		INDICATE		
J	POWER	SCAN			
K	TIME, TIME SCHEDULE	TIME RATE OF CHANGE		CONTROL STATION	
L	LEVEL		LIGHT		L–LOW–(ALARM) LL–LOW–(SHUTDOWN)
M	MOTOR	MOMENTARY	MONITOR, ON OR OPERATE		MIDDLE, INTERMEDIATE
N	MOISTURE, HUMIDITY		UNCLASSIFIED	START	USER'S CHOICE
O	UNCLASSIFIED		OPEN ORIFICE, RESTRICTION POINT (TEST) CONNECTION	STOP	OVERLOAD
P	PRESSURE, VACUUM		POINT (TEST) CONNECTION	PNEUMATIC	
Q	QUANTITY	INTEGRATE, TOTALIZE	INTEGRATE, TOTALIZE	INTEGRATE OR TOTALIZE	
R	RADIATION, RADIOACTIVITY	RATIO	RECORD		
S	SPEED, FREQUENCY, SOLENOID	SAFETY		SWITCH OR SAFETY	
T	TEMPERATURE			TRANSMIT	
TQ	TORQUE				
TV	TELEVISION				
U	MULTIVARIABLE		MULTIFUNCTION	MULTIFUNCTION	MULTIFUNCTION
V	VIBRATION, MECHANICAL ANALYSIS			VALVE, DAMPER, LOUVRE	
VS	VISCOSITY				
W	WEIGHT, FORCE		WELL		
X	ON/OFF	X AXIS	UNCLASSIFIED	UNCLASSIFIED	UNCLASSIFIED
Y	EVENT, STATE OR PRESENCE	Y AXIS		RELAY, COMPUTE, CONVERT	
Z	POSITION, DIMENSION PRESENCE	Z AXIS		DRIVER, ACTUATOR, UNCLASSIFIED FINAL CONTROL ELEMENT	

ALARMS:

PC 069 — H / L

HH = HIGH HIGH ALARM
H = HIGH ALARM
L = LOW ALARM
R = RATE ALARM

YS 327 — % Q

PLC, % AI = ANALOG INPUT
% AQ = ANALOG OUTPUT
% Q = DISCRETE OUTPUT
% I = DISCRETE INPUT
YS = STATUS OF SWITCH (EVENT SWITCH)

EXAMPLES:

PI 22 — FIELD LOCATED DISCRETE PRESSURE INDICATOR

LAH 07 — CONTROL ROOM PC COMPUTER DISPLAY HIGH LEVEL ALARM

AREA CODES

100	HEADWORKS
200	PUMP STATION
300	ATAD, SEPTAGE, RBS
900	ADMINISTRATION

LINE NUMBERING SYSTEM

HPA 150 ST
FLUID CODE — MATERIAL — NOMINAL PIPE DIA.

FLUID CODE	FLUID	FLUID CODE	FLUID
CLS	CHLORINE SOLUTION	PLW	PLANT WATER
D	DRAIN	POL	POLYELECTROLYTE SOLUTION
FOM	FOAM	PW	POTABLE WATER
H_2SO_4	SULPHURIC ACID LINE	RC	RECIRCULATED FLOW
HDSL	HOT DIGESTED SLUDGE LINE	SS	SAMPLE SOLUTION
HPA	HIGH PRESSURE AIR	TD	TANK DRAIN
HWR	HOT WATER RETURN	TSL	THICKENED SLUDGE
HWS	HOT WATER SUPPLY	VT	VENT
LPA	LOW PRESSURE AIR	WAS	WASTE ACTIVATED SLUDGE
NaOH	CAUSTIC LINE		
NPW	NON POTABLE WATER		
OF	OVERFLOW		
OZ	OZONE		

NOTE: ALSO SEE MECHANICAL AND ELECTRICAL ABBREV.

GENERAL SYMBOLS AND TAGS

1. ON DRAWING (IE. P101) CONTINUATION IS SHOWN AS: P 102
2. ON DRAWING (IE. P102) CONTINUATION IS SHOWN AS: P 101

EXISTING EQUIPMENT TAG
NEW EQUIPMENT TAG
EXISTING PIPE TAG
NEW PIPE TAG
1 — REVISION TAG

ATTRIBUTE LEGEND

TYPICAL FORMAT

FI 905 — % Q — PLC #

OUTPUT — SUCCEEDING LETTER — FIRST LETTER — OUTPUT — PHYSICAL LOCATION — INPUT — LOOP NUMBER — ISA DESIGNATION

"These Record Drawings have been prepared based on information provided by the Contractor and others. Dayton & Knight Ltd. has not verified the accuracy or completeness of the information provided to them and does not warrant the accuracy or completness of these Record Drawings. Users of these Record Drawings assume all risk of loss resulting from their use."

EQUIPMENT NUMBER

ME 1234.01

ANCILLARY EQUIPMENT NUMBER
MAIN EQUIPMENT NUMBER
AREA
FLUID: 1 – WASTEWATER
2 – FRESH WATER
3 – RESIDUALS
4 – AIR
5 – CHEMICALS
EQUIPMENT GENERAL:
EF – EXHAUST FAN
ME – MECHANICAL EQUIPMENT
P – PUMP
SF – SUPPLY FAN
T – TANK
SV – SOLENOID VALVE

LINE DESIGNATIONS

ES — ELECTRIC POWER SUPPLY 120 VAC 60 HZ (UNLESS OTHERWISE NOTED)
LINE CONTINUATION TO/FROM
SPECIFICATION AND/OR LINE NUMBER CHANGE
* SUPPLIED BY EQUIPMENT VENDOR

WHISTLER

PLOT: FULL 1:25 HALF 1:50

FILE: P:\Recdwgs\WHISTLER\179-75-1\PROCESS AND INSTRUMENTATION\179-75-1 P1.dwg Tab Model 11-01-14 dchen

AutoCAD DRAWING

REVISIONS

ISSUE	DATE	DRAWN	CHK'D	APP'D	DESCRIPTION	ISSUE	DATE	DRAWN	CHK'D	APP'D	DESCRIPTION
A	MAY12/08	KS	WB	WB	ISSUED FOR TENDER						
B	JUL8/08	KS	WB	WB	ISSUED FOR CONSTRUCTION						
C	DEC15/09	AS	WB	WB	RECORD DRAWING						

DESIGNED WB
DRAWN DBC
CHECKED WB

Dayton & Knight Ltd.
CONSULTING ENGINEERS
#210-889 HARBOURSIDE DR., NORTH VANCOUVER, B.C. V7P 3S1
TEL.: (604) 990-4800 FAX: (604) 990-4805 www.dayton-knight.com

RESORT MUNICIPALITY OF WHISTLER
RAINBOW PARK PUMP STATION
P&ID STANDARD TAGS AND ABBREVIATIONS

SCALE: NONE
DRAWING No. 179.75.1
SHEET No. P1 ISSUE C

EQUIPMENT

- BAR SCREEN, MECHANICAL
- BLOWER OR CENTRIFUGAL FAN
- CALIBRATION COLUMN CONTROL DAMPER
- CENTRIFUGE
- COMPRESSOR, ROTARY SCREW
- DIFFUSER HEADER
- FILTER OR FILTER–SILENCER INLET AIR
- MIXER
- MIXER, HORIZONTAL SURFACE
- MIXER, INLINE STATIC
- MOTOR (MAYBE ELECTRIC, HYDRAULIC OR PNEUMATIC
- MOTORIZED CONTROL DAMPER
- OUTFALL DIFFUSER
- PULSATION DAMPER
- TELESCOPIC GATE VALVE
- WEIR
- PUMP (GRINDER)
- PUMP (PERISTALIC/HOSE)
- PUMP (DUAL DIAPHRAGM)
- PUMP (PROGRESSIVE CAVITY)
- PUMP (ROTARY LOBE) OR BLOWER
- PUMP (SUBMERSIBLE)
- PUMP (VERTICAL)
- PUMP (CENTRIFUGAL)
- PUMP (METERING)
- RECEIVER OR PRESSURE VESSEL
- RESERVOIR
- SLIDE GATE (NORMALLY CLOSED)
- SLIDE GATE (NORMALLY OPEN)
- SLUICE GATE (NORMALLY CLOSED)
- SLUICE GATE (NORMALLY OPEN)
- STOP LOG (NORMALLY OPEN)
- STOP LOG (NORMALLY CLOSED)
- TANK

EQUIPMENT REQUIRING DRIVES:

EQUIPMENT TYPES:

- BLOWER OR FAN
- CENTRIFUGAL PUMP
- MOTOR

DRIVES

DRIVE TYPES:

- DRIVE–HYDRAULIC, PNEUMATIC, TURBINE OR INTERNAL COMBUSTION ENGINE
- ELECTRIC DRIVE

MODIFICATIONS:

- BACKSTOP, BRAKE OR CLUTCH
- DRIVE INTERLOCK
- DRIVE INTERLOCK SEQUENCE TERMINATION
- DRIVE PERSONAL SAFETY INTERLOCK
- EXISTING DRIVE
- NEW DRIVE
- REVERSIBLE
- VS — VARIABLE SPEED

- B — BUBBLER SYSTEM
- I — INTERLOCK – SEE CONTROL STRATEGY DESC.
- P — PURGE OR FLUSHING DEVICE

PIPING SYMBOLS

- AIR INTAKE
- AIR VENT
- A — ANNULAR TYPE INLINE PRESSURE SENSOR
- BLIND FLANGE
- CAMLOCK (UTILITY STATION)
- CAP OR PLUG
- CIRCULAR BLANK OR SPECTACLE BLIND
  - OPTIONS: NORMALLY OPEN; NORMALLY CLOSED
- QUICK CONNECTION (HOSE)
- FIXED CONNECTION (HOSE)
- DAMPER
- DESUPERHEATER INLINE
- DRAIN
- D — DRAIN/FUNNEL
- DRAIN TO FLOOR
- DRAIN TO TRENCH
- EJECTOR
- EQUIPMENT INSULATION
- EXPANSION JOINT
- FLAME ARRESTOR
- FLANGE
- FLEXIBLE CONNECTOR
- GOOSE NECK VENT
- GROUND — GROUND (ELECTRICAL)
- IN–LINE INSTRUMENT
- INSTRUMENT CHEMICAL DIAPHRAGM SEAL
- LINE SLOPE
- LIQUID LEVEL
- MIXER
- ORIFICE PLATE
- PIPE INSULATION
- E — PIPE HEAT TRACING E=ELECTRIC S=STEAM
- PIPE MATERIAL OR SIZE OR NEW / OLD JUNCTION
- PIPE PLUG
- PRESSURE GUAGE
- REDUCER
- FIC — ROTAMETER
- RUPTURE DISC
- SENSOR
- SIGHT GLASS
- STEAM TRAP WITHOUT BYPASS
- STEAM TRAP WITH BYPASS
- TYPICAL 3 OUTPUT SIGNAL TO CONTROL
- UNION
- UTILITY STATION (NUMBER, IF ANY, DESIGNATES TYPE)
- WELDED CAP
- Y–TYPE STRAINER

CO	CLEAN OUT
DC	DRAIN CONNECTION
FC	FLUSHING CONNECTION
SB	STEAM BLOW
SC	SAMPLE CONNECTION
TC	TEST CONNECTION

"These Record Drawings have been prepared based on information provided by the Contractor and others. Dayton & Knight Ltd. has not verified the accuracy or completeness of the information provided to them and does not warrant the accuracy or completeness of these Record Drawings. Users of these Record Drawings assume all risk of loss resulting from their use."

VALVE LABELLING SYSTEM

- AAV — AUTOMATIC AIR VALVE
- KO — BALL CHECK VALVE
- BALL VALVE
- BLAST GATE (BG)
- BUTTERFLY VALVE
- BUTTERFLY VALVE DAMPER VALVE
- CHECK VALVE
- CONTROL VALVE
- DIAPHRAGM VALVE
- FOUR–WAY VALVE
- GATE/MANUAL VALVE
- GLOBE VALVE
- KNIFE GATE VALVE
- MUD VALVE
- NEEDLE VALVE
- PINCH VALVE
- PLUG VALVE
- S — SOLENOID VALVE
- THREE–WAY VALVE
- DOUBLE CHECK VALVE BACKFLOW PREVENTER
- REDUCED PRESSURE BACKFLOW PREVENTER
- BACK PRESSURE REGULATING VALVE
- PRESSURE REDUCING
- PRESSURE REGULATING MODULATING VALVE,
- PRESSURE REGULATING VALVE (EXTERNAL SENSING)
- PRESSURE REGULATING VALVE (INTERNAL SENSING)
- ON/OFF VALVE
- PRESSURE RELIEF VALVE
- PRESSURE AND VACUUM RELIEF VALVE
- SAFETY RELIEF VALVE
- VACUUM RELIEF VALVE

OPTIONS:
- NORMALLY CLOSED
- NORMALLY OPEN

FAIL OPTIONS: LOSS OF AIR (OR POWER)

FO	FAIL OPEN
FC	FAIL CLOSE
FI	FAIL INDETERMINATE
FL	FAIL LAST POSITION

EXAMPLE:
- PNEUMATIC CONTROL LINE
- ON–OFF VALVE
- NORMALLY CLOSED
- FC — FAIL CLOSED

VALVE OPERATORS

- M — MOTOR ACTUATOR
- PNEUMATIC CYLINDER
- M — BLEED VALVE
- DIAPHRAGM (PRESSURE BALANCE)
- S — SOLENOID
- DIAPHRAGM (SPRING OPPOSED)

PRIMARY ELEMENT SYMBOLS

- ANNUBAR
- ANNULAR TYPE DIAPHRAGM PRESSURE SEAL
- DIAPHRAGM SEAL
- DISPLACEMENT LEVEL ELEMENT
- FT — FLOW ELEMENT INTEGRAL WITH TRANSMITTER (MASS FLOW, ETC)
- FLOAT LEVEL ELEMENT
- FLUME (PARSHALL OR TRAPEZOIDAL)
- VENTURI OR FLOW TUBE ANEMOMETER
- WEIR FLOWMETER
- IN–LINE PRESSURE SENSOR
- M — MAGNETIC FLOWMETER
- N — NUCLEAR DENSITY METER
- PITOT TUBE
- R — ROTAMETER
- R — 1–10 GPM ROTAMETER W/ NEEDLE VALVE
- TURBINE OR PROPELLER TYPE METER
- ULTRASONIC FLOWMETER
- LE — ULTRASONIC/MICROWAVE LEVEL ELEMENT
- ULTRASONIC LEVEL METER
- ULTRASONIC METER (STRAP ON)

WHISTLER

PLOT: FULL 1:25 HALF 1:50

FILE: P:\Recdwgs\WHISTLER\179-75-1\PROCESS AND INSTRUMENTATION\179-75-1 P2.dwg Tab Model 11-01-14 dchen

AutoCAD DRAWING

REVISIONS

ISSUE	DATE	DRAWN	CHK'D	APP'D	DESCRIPTION
A	MAY12/08	KS	WB	WB	ISSUED FOR TENDER
B	JUL8/08	KS	WB	WB	ISSUED FOR CONSTRUCTION
C	DEC15/09	AS	WB	WB	RECORD DRAWING

ISSUE	DATE	DRAWN	CHK'D	APP'D	DESCRIPTION

DESIGNED WB
DRAWN DBC
CHECKED WB

Dayton & Knight Ltd.
CONSULTING ENGINEERS
#210-889 HARBOURSIDE DR., NORTH VANCOUVER, B.C. V7P 3S1
TEL.: (604) 990-4800 FAX: (604) 990-4805 www.dayton-knight.com

RESORT MUNICIPALITY OF WHISTLER
RAINBOW PARK PUMP STATION
P&ID STANDARD SYMBOLS
EQUIPMENT, VALVES AND INSTRUMENTATION

SCALE: NONE
DRAWING No. 179.75.1
SHEET No. P2 ISSUE C

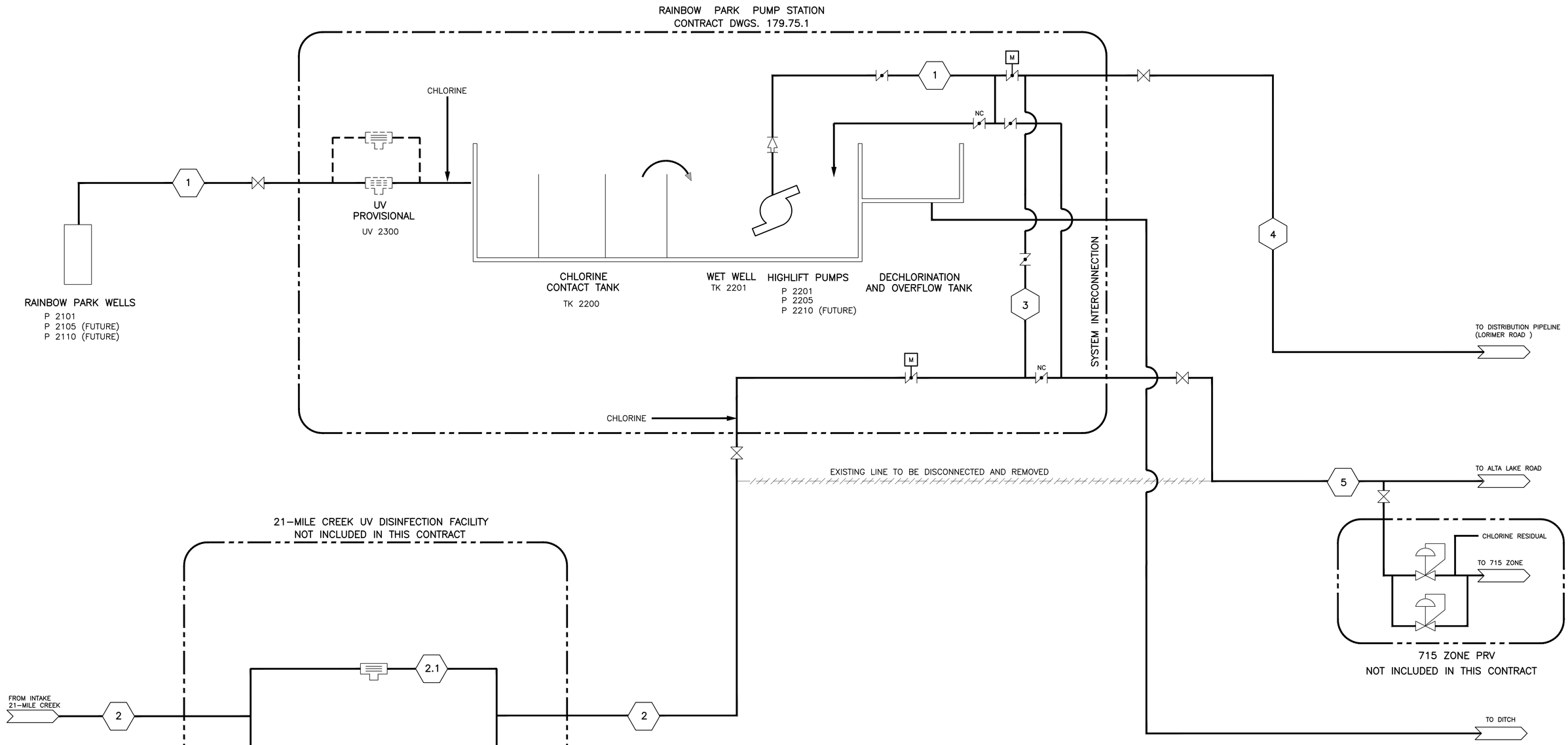

FLOW (L/s)			
		INITIAL	MAXIMUM
1	GROUND WATER	75	150
2	SURFACE WATER	150	262
2.1	UV TRAIN #1	150	150
2.2	UV TRAIN #2	150	150
3	SYSTEM INTERCONNECTION	150	262
4	SYSTEM DISCHARGE	225	412
5	21 MILE DISCHARGE	150	262

"These Record Drawings have been prepared based on information provided by the Contractor and others. Dayton & Knight Ltd. has not verified the accuracy or completeness of the information provided to them and does not warrant the accuracy or completeness of these Record Drawings. Users of these Record Drawings assume all risk of loss resulting from their use."

WHISTLER

PLOT: FULL 1:25 HALF 1:50

FILE: P:\Recdwgs\WHISTLER\179-75-1\PROCESS AND INSTRUMENTATION\179-75-1 P3_P4_P5_P6_P7_P8.dwg Tab: P3 11-01-14 dchen

AutoCAD DRAWING

REVISIONS

ISSUE	DATE	DRAWN	CHK'D	APP'D	DESCRIPTION	ISSUE	DATE	DRAWN	CHK'D	APP'D	DESCRIPTION
A	MAY12/08	KS	WB	WB	ISSUED FOR TENDER						
B	JUL8/08	KS	WB	WB	ISSUED FOR CONSTRUCTION						
C	DEC15/09	AS	WB	WB	RECORD DRAWING						

DESIGNED WB
DRAWN KS
CHECKED WB

Dayton & Knight Ltd.
CONSULTING ENGINEERS
#210-889 HARBOURSIDE DR., NORTH VANCOUVER, B.C. V7P 3S1
TEL.: (604) 990-4800 FAX: (604) 990-4805 www.dayton-knight.com

RESORT MUNICIPALITY OF WHISTLER
RAINBOW PARK PUMP STATION
PROCESS AND INSTRUMENTATION
OVER VIEW

SCALE: NTS
DRAWING No. 179.75.1
SHEET No. P3 ISSUE C

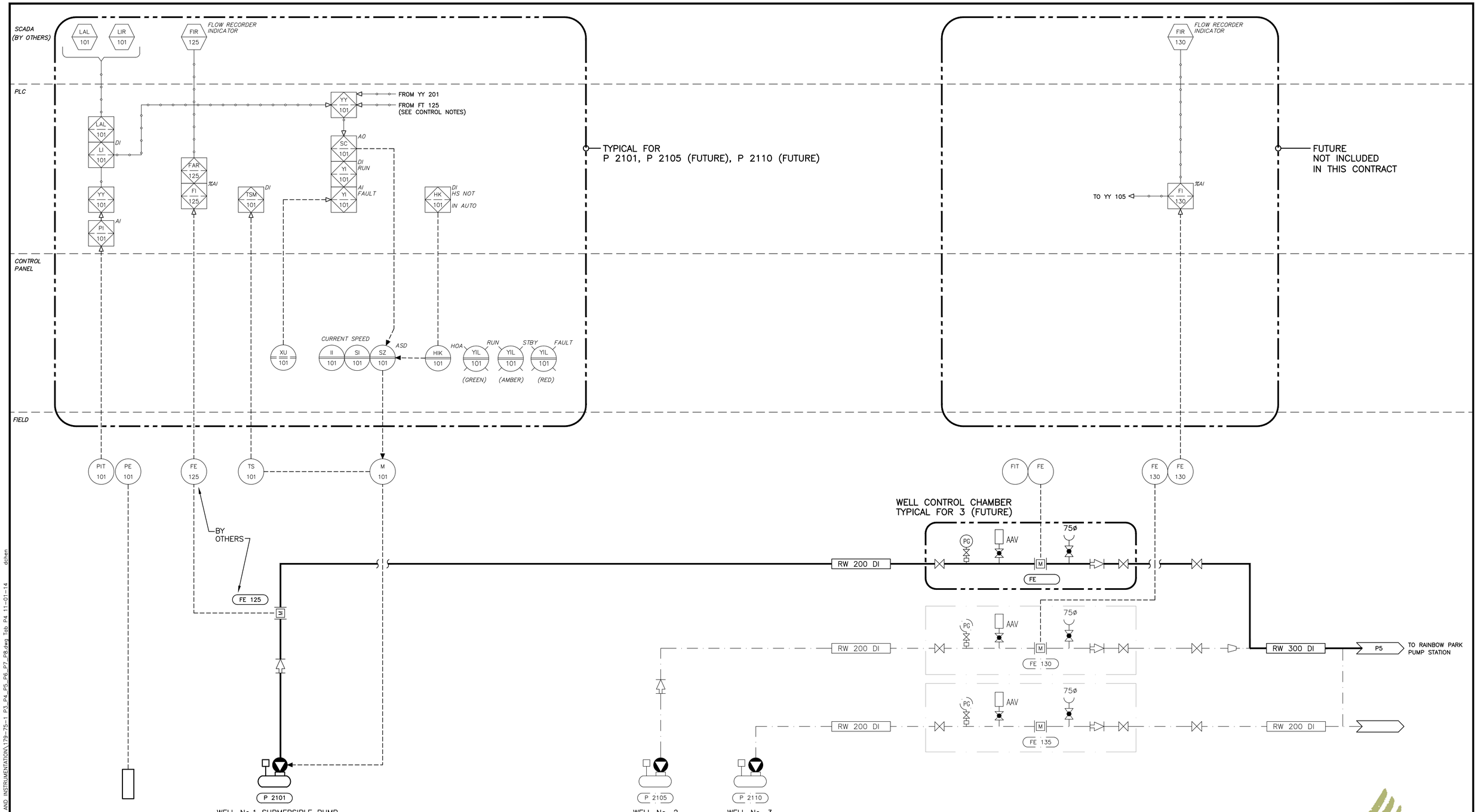

"These Record Drawings have been prepared based on information provided by the Contractor and others. Dayton & Knight Ltd. has not verified the accuracy or completeness of the information provided to them and does not warrant the accuracy or completeness of these Record Drawings. Users of these Record Drawings assume all risk of loss resulting from their use."

WHISTLER

PLOT: FULL 1:25 HALF 1:50

FILE: P:\Recdwgs\WHISTLER\179-75-1\PROCESS AND INSTRUMENTATION\179-75-1 P3_P4_P5_P6_P7_P8.dwg Tab P4 11-01-14 dchen

AutoCAD DRAWING

REVISIONS

ISSUE	DATE	DRAWN	CHK'D	APP'D	DESCRIPTION	ISSUE	DATE	DRAWN	CHK'D	APP'D	DESCRIPTION
A	MAY12/08	KS	WB	WB	ISSUED FOR TENDER	D	DEC15/09	AS	WB	WB	RECORD DRAWING
B	JUN03/08	KS	WB	WB	2 ADDENDUM No. 2						
C	JUL8/08	KS	WB	WB	ISSUED FOR CONSTRUCTION						

DESIGNED WB
DRAWN DBC
CHECKED WB

Dayton & Knight Ltd.
CONSULTING ENGINEERS
#210-889 HARBOURSIDE DR., NORTH VANCOUVER, B.C. V7P 3S1
TEL.: (604) 990-4800 FAX: (604) 990-4805 www.dayton-knight.com

RESORT MUNICIPALITY OF WHISTLER
RAINBOW PARK PUMP STATION
PROCESS AND INSTRUMENTATION
GROUNDWATER WELLS

SCALE: NTS
DRAWING No. 179.75.1
SHEET No. P4 ISSUE D

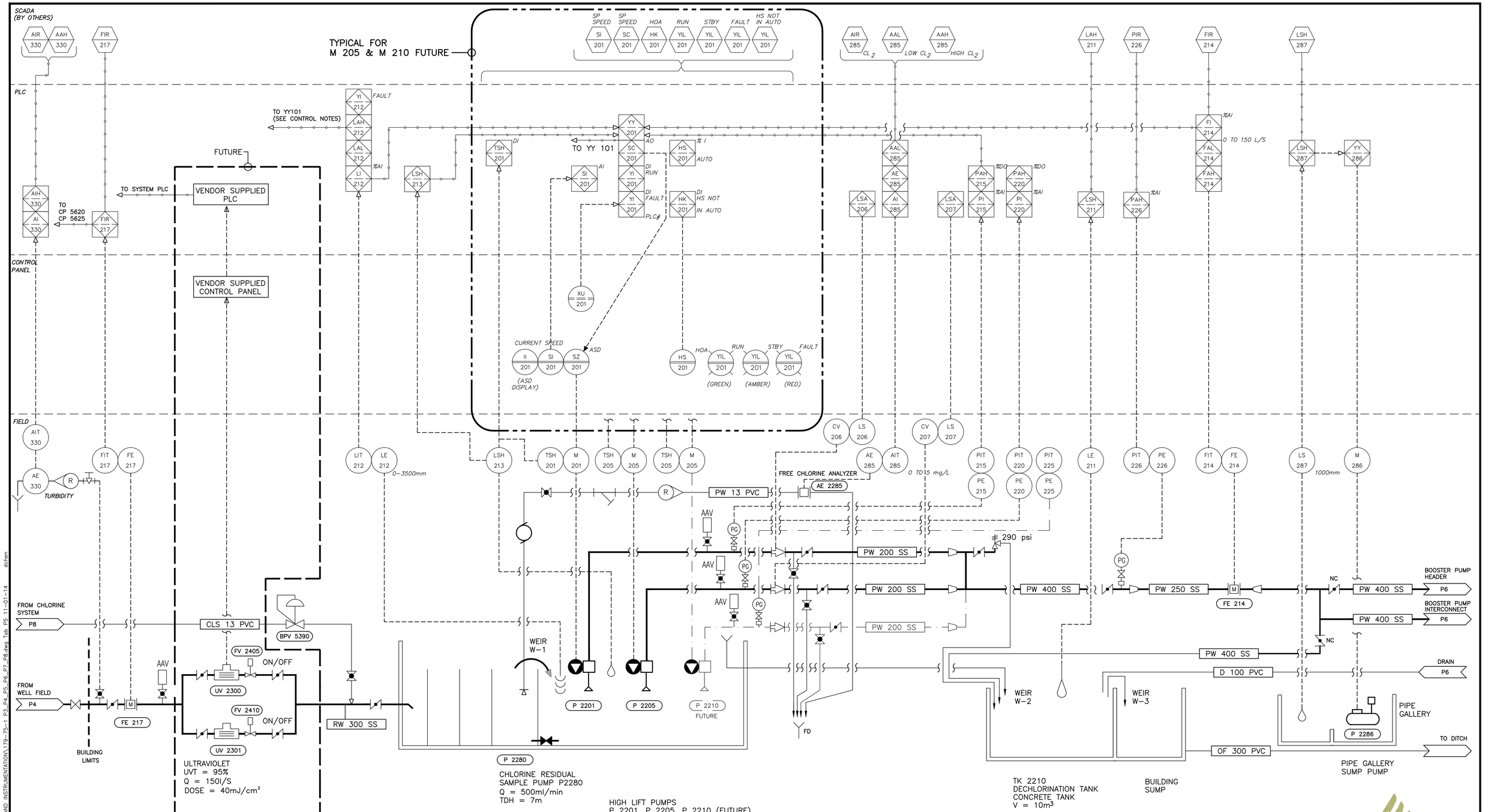

"These Record Drawings have been prepared based on information provided by the Contractor and others. Dayton & Knight Ltd. has not verified the accuracy or completeness of the information provided to them and does not warrant the accuracy or completeness of these Record Drawings. Users of these Record Drawings assume all risk of loss resulting from their use."

WHISTLER

PLOT: FULL 1:25 HALF 1:50

FILE: P:\Recdwgs\WHISTLER\179-75-1\PROCESS AND INSTRUMENTATION\179-75-1 P3_P4_P5_P6_P7_P8.dwg Tab P5 11-01-14 dchen

AutoCAD DRAWING

REVISIONS	ISSUE	DATE	DRAWN	CHK'D	APP'D	DESCRIPTION	ISSUE	DATE	DRAWN	CHK'D	APP'D	DESCRIPTION
	A	MAY12/08	KS	WB	WB	ISSUED FOR TENDER						
	B	JUL8/08	KS	WB	WB	ISSUED FOR CONSTRUCTION						
	C	DEC15/09	AS	WB	WB	RECORD DRAWING						

DESIGNED WB
DRAWN DBC / CWW
CHECKED WB

Dayton & Knight Ltd.
CONSULTING ENGINEERS
#210-889 HARBOURSIDE DR., NORTH VANCOUVER, B.C. V7P 3S1
TEL.: (604) 990-4800 FAX: (604) 990-4805 www.dayton-knight.com

RESORT MUNICIPALITY OF WHISTLER
RAINBOW PARK PUMP STATION
PROCESS AND INSTRUMENTATION
HIGH LIFT PUMPS

SCALE: NTS
DRAWING No. 179.75.1
SHEET No. P5 ISSUE C

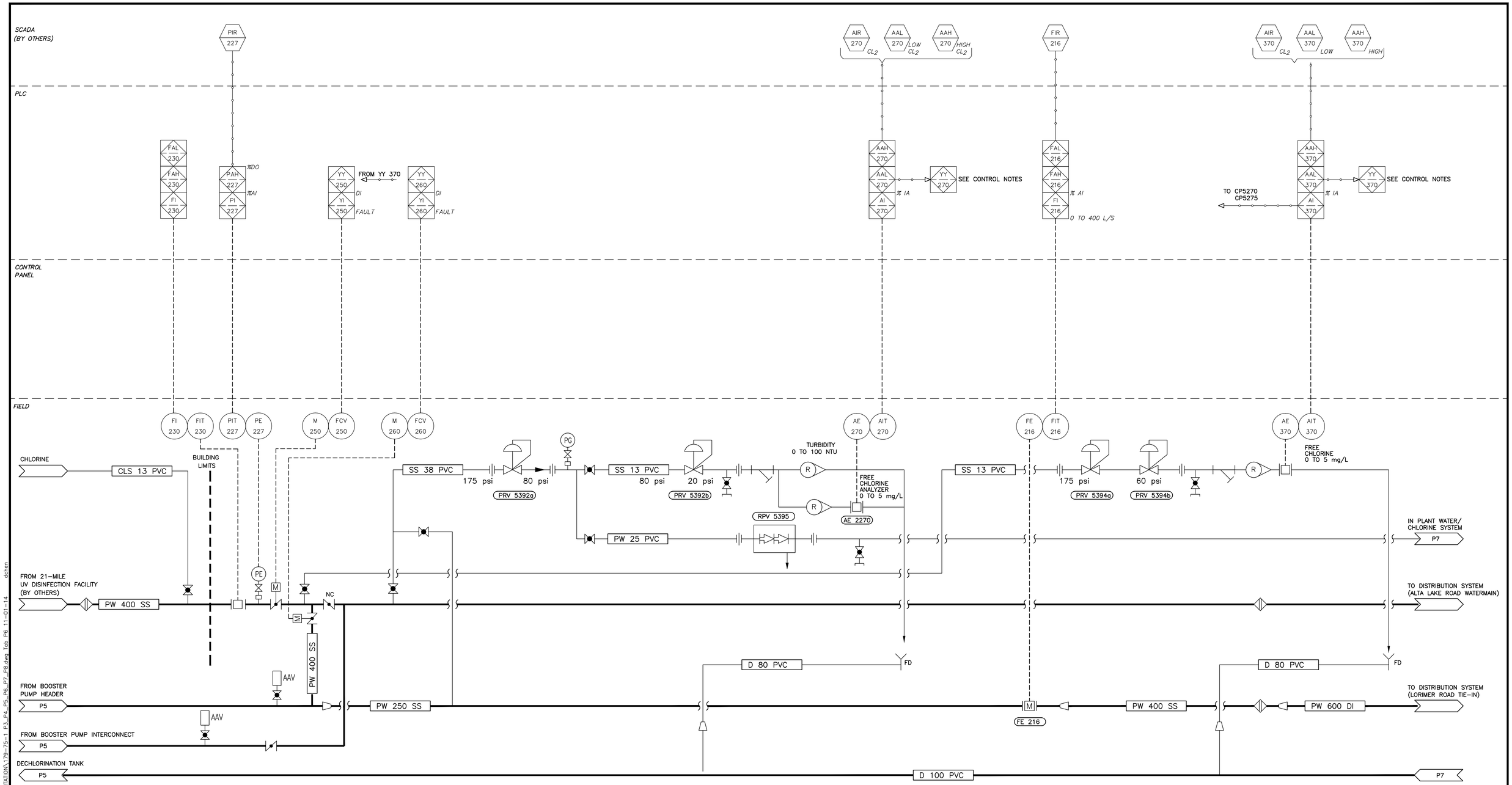

"These Record Drawings have been prepared based on information provided by the Contractor and others. Dayton & Knight Ltd. has not verified the accuracy or completeness of the information provided to them and does not warrant the accuracy or completeness of these Record Drawings. Users of these Record Drawings assume all risk of loss resulting from their use."

WHISTLER

PLOT: FULL 1:25 HALF 1:50

FILE: P:\Recdwgs\WHISTLER\179-75-1\PROCESS AND INSTRUMENTATION\179-75-1 P3_P4_P5_P6_P7_P8.dwg Tab P6 11-01-14 dchen

AutoCAD DRAWING

REVISIONS	ISSUE	DATE	DRAWN	CHK'D	APP'D	DESCRIPTION	ISSUE	DATE	DRAWN	CHK'D	APP'D	DESCRIPTION
	A	MAY12/08	KS	WB	WB	ISSUED FOR TENDER	D	DEC15/09	AS	WB	WB	RECORD DRAWING
	B	JUN03/08	KS	WB	WB	2 ADDENDUM No. 2						
	C	JUL8/08	KS	WB	WB	ISSUED FOR CONSTRUCTION						

DESIGNED WB
DRAWN KS
CHECKED WB

Dayton & Knight Ltd.
CONSULTING ENGINEERS
#210-889 HARBOURSIDE DR., NORTH VANCOUVER, B.C. V7P 3S1
TEL.: (604) 990-4800 FAX: (604) 990-4805 www.dayton-knight.com

RESORT MUNICIPALITY OF WHISTLER
RAINBOW PARK PUMP STATION
PROCESS AND INSTRUMENTATION
DISCHARGE PIPINGS

SCALE: NTS
DRAWING No. 179.75.1
SHEET No. P6 ISSUE D

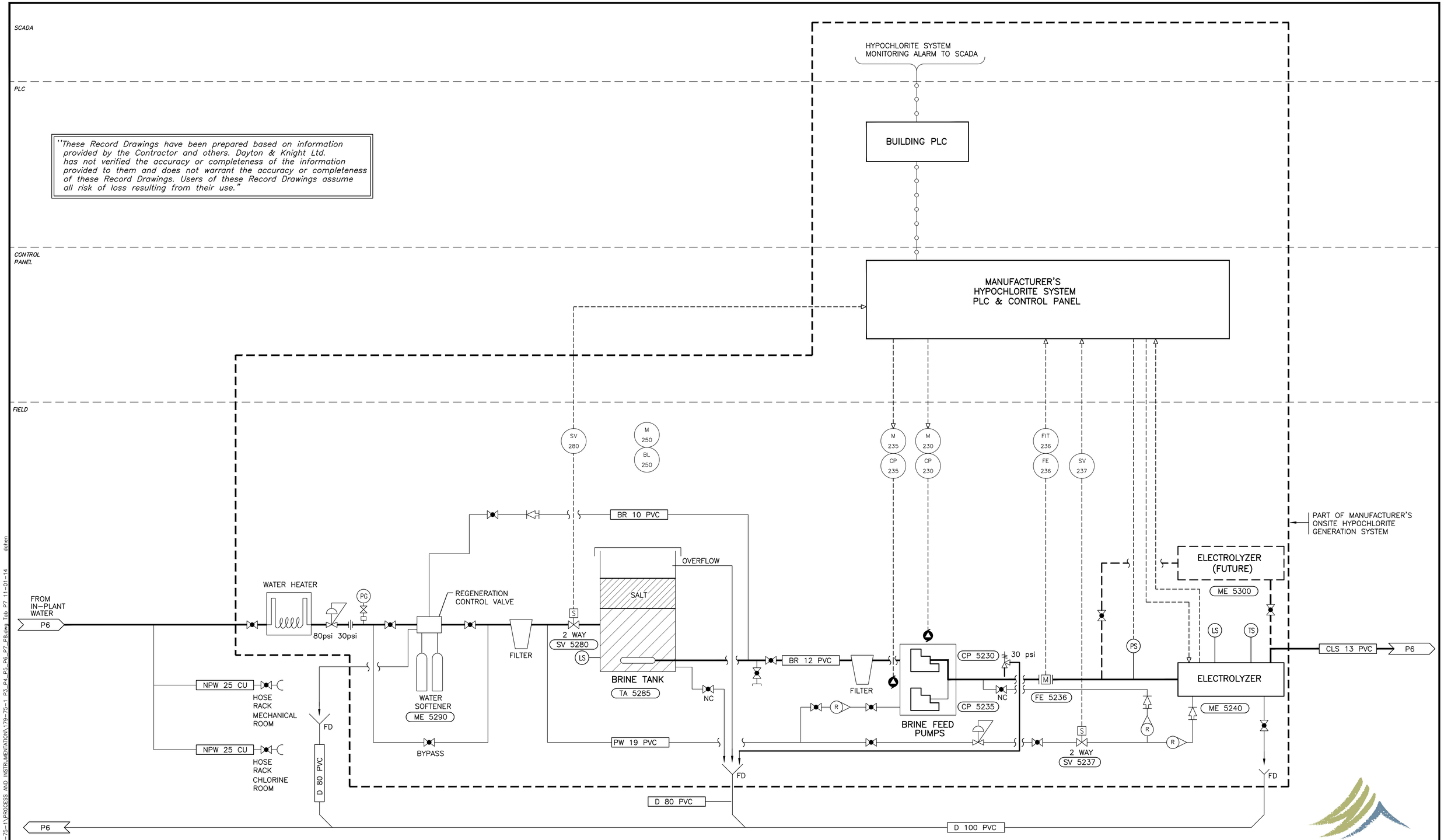

"These Record Drawings have been prepared based on information provided by the Contractor and others. Dayton & Knight Ltd. has not verified the accuracy or completeness of the information provided to them and does not warrant the accuracy or completeness of these Record Drawings. Users of these Record Drawings assume all risk of loss resulting from their use."

WHISTLER

FILE: P:\Recdwgs\WHISTLER\179-75-1\PROCESS AND INSTRUMENTATION\179-75-1 P3_P4_P5_P6_P7_P8.dwg Tab P7 11-01-14 dchen

PLOT: FULL 1:25 HALF 1:50

AutoCAD DRAWING

REVISIONS

ISSUE	DATE	DRAWN	CHK'D	APP'D	DESCRIPTION	ISSUE	DATE	DRAWN	CHK'D	APP'D	DESCRIPTION
A	MAY12/08	KS	WB	WB	ISSUED FOR TENDER						
B	JUL8/08	KS	WB	WB	ISSUED FOR CONSTRUCTION						
C	DEC15/09	AS	WB	WB	RECORD DRAWING						

DESIGNED WB
DRAWN DBC
CHECKED WB

Dayton & Knight Ltd.
CONSULTING ENGINEERS
#210-889 HARBOURSIDE DR., NORTH VANCOUVER, B.C. V7P 3S1
TEL.: (604) 990-4800 FAX: (604) 990-4805 www.dayton-knight.com

RESORT MUNICIPALITY OF WHISTLER
RAINBOW PARK PUMP STATION
PROCESS AND INSTRUMENTATION DIAGRAM
CHLORINE GENERATION SYSTEM

SCALE: NTS
DRAWING No. 179.75.1
SHEET No. P7 ISSUE C

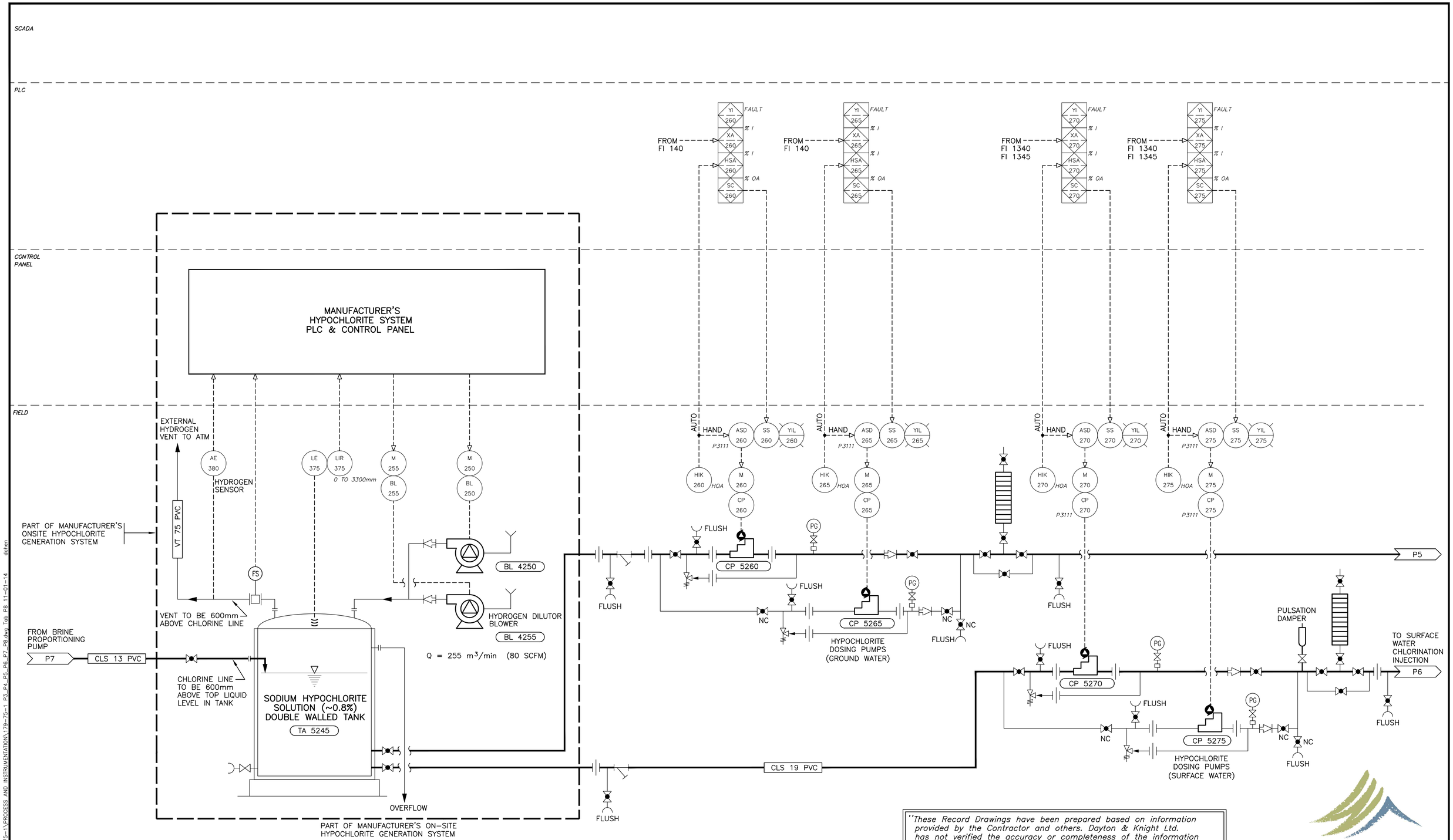

"These Record Drawings have been prepared based on information provided by the Contractor and others. Dayton & Knight Ltd. has not verified the accuracy or completeness of the information provided to them and does not warrant the accuracy or completeness of these Record Drawings. Users of these Record Drawings assume all risk of loss resulting from their use."

WHISTLER

PLOT: FULL 1:25 HALF 1:50

FILE: P:\Recdwgs\WHISTLER\179-75-1\PROCESS AND INSTRUMENTATION\179-75-1 P3_P4_P5_P6_P7_P8.dwg Tab P8 11-01-14 dchen

AutoCAD DRAWING

REVISIONS

ISSUE	DATE	DRAWN	CHK'D	APP'D	DESCRIPTION	ISSUE	DATE	DRAWN	CHK'D	APP'D	DESCRIPTION
A	MAY12/08	KS	WB	WB	ISSUED FOR TENDER						
B	JUL8/08	KS	WB	WB	ISSUED FOR CONSTRUCTION						
C	DEC15/09	AS	WB	WB	RECORD DRAWING						

DESIGNED WB
DRAWN DBC / CWW
CHECKED WB

Dayton & Knight Ltd.
CONSULTING ENGINEERS
#210-889 HARBOURSIDE DR., NORTH VANCOUVER, B.C. V7P 3S1
TEL.: (604) 990-4800 FAX: (604) 990-4805 www.dayton-knight.com

RESORT MUNICIPALITY OF WHISTLER
RAINBOW PARK PUMP STATION
PROCESS AND INSTRUMENTATION DIAGRAM
CHLORINE PUMPING SYSTEM

SCALE: NTS
DRAWING No. 179.75.1
SHEET No. P8 ISSUE C

GENERAL CONSTRUCTION NOTES

GENERAL NOTES

1. ***SCOPE :*** THE NOTES AND DETAILS ON THIS SHEET ARE GENERAL AND APPLY TO THE ENTIRE PROJECT EXCEPT WHERE THERE ARE SPECIFIC INDICATIONS TO THE CONTRARY.
2. ***APPLICABLE SPECIFICATIONS AND CODES :*** CONSTRUCTION SHALL BE IN ACCORDANCE WITH THE LATEST EDITION OF THE NATIONAL BUILDING CODE EXCEPT WHERE OTHER APPLICABLE CODES OR THE FOLLOWING NOTES ARE MORE RESTRICTIVE.
3. ***DIMENSIONS :*** STRUCTURAL DIMENSIONS CONTROLLED BY OR RELATED TO MECHANICAL OR ELECTRICAL EQUIPMENT SHALL BE VERIFIED BY THE CONTRACTOR PRIOR TO CONSTRUCTION.
4. ***PROVISIONS FOR EQUIPMENT :*** MECHANICAL AND ELECTRICAL EQUIPMENT SUPPORTS, ANCHORAGES, OPENINGS, RECESSES AND REVEALS NOT SHOWN ON THE STRUCTURAL DRAWINGS BUT REQUIRED BY OTHER CONTRACT DRAWINGS SHALL BE PROVIDED FOR PRIOR TO CASTING CONCRETE.
5. ***CONSTRUCTION LOADS :*** STRUCTURES HAVE BEEN DESIGNED FOR OPERATION LOADS ON THE COMPLETED STRUCTURES. DURING CONSTRUCTION, THE STRUCTURES SHALL BE PROTECTED BY BRACING AND BALANCING WHEREVER EXCESSIVE CONSTRUCTION LOADS MAY OCCUR. ALL TEMPORARY AND PERMANENT SURCHARGE LOADS SHALL BE CONSIDERED.
6. THE CONTRACTOR IS RESPONSIBLE FOR SHORING AND UNDERPINNING. DOCUMENTS RELATING TO THIS WORK SHALL BE SEALED AND SIGNED BY A BRITISH COLUMBIA PROFESSIONAL ENGINEER.
7. ***DRAINAGE SURFACES :*** FLOOR ELEVATIONS SHOWN ON CONCRETE OUTLINE DRAWINGS ARE PERIMETER ELEVATIONS FOR STRUCTURAL SLABS AND MAY NOT INDICATE FLOOR SLOPES, TOPPING OR FLOOR ELEVATIONS. FOR AREAS REQUIRING FLOOR SLOPES, TOPPING AND FLOOR DRAIN (ELEVATIONS AND LOCATIONS), SEE ARCHITECTURAL AND MECHANICAL DRAWINGS.

f_c = 30 MPa, f_y = 400 MPa	BAR SIZE	MINIMUM STRAIGHT EMBEDMENT DEVELOPMENT LENGTHS (mm)		MINIMUM TENSION EMBEDMENT WITH STANDARD END HOOKS E
		COMPRESSION	TENSION	
	10M	200	300	200
	15M	280	450	200
	20M	340	600	220
	25M	440	1000	450
	30M	530	1200	630

f_c = 30 MPa, f_y = 400 MPa	BAR SIZE	LAP SPLICE LENGTHS (mm)	
		TENSION	COMPRESSION
	10M	400	300
	15M	600	450
	20M	800	600
	25M	1200	750
	30M	1600	900

NOTES :

1. FOR LOCATION OF PIPING, FLOOR DRAINS, ELECTRICAL / INSTRUMENTATION CONDUIT, VENTILATION DUCTS WHICH PASS THROUGH CONCRETE SLABS, WALLS AND/OR ROOFS, REFER TO THE MECHANICAL, VENTILATION, ELECTRICAL AND INSTRUMENTATION DRAWINGS TO COORDINATE THIS PART OF THE WORK.
2. FOR DETAILS OF NEW FOUNDATION DRAINS, WHICH PASSED UNDERNEATH NEW CONCRETE SLABS REFER TO GENERAL DRAWINGS, UNLESS NOTED OTHERWISE IN SPECIFICATIONS.

"These Record Drawings have been prepared based on information provided by the Contractor and others. Dayton & Knight Ltd. has not verified the accuracy or completeness of the information provided to them and does not warrant the accuracy or completeness of these Record Drawings. Users of these Record Drawings assume all risk of loss resulting from their use."

STEEL

1. ***APPLICABLE SPECIFICATIONS AND CODES :*** STEEL CONSTRUCTION SHALL CONFORM TO CSA S16 "STEEL STRUCTURES FOR BUILDINGS" AS CONTAINED IN THE NATIONAL BUILDING CODE.
2. ***BOLTED JOINTS*** EXCEPT FOR BOLTS ANCHORED IN CONCRETE, BOLTED JOINTS SHALL CONFORM TO THE SPECIFICATIONS OF THE CANADIAN INSTITUTE OF STEEL CONSTRUCTION. BOLTS SHALL BE AS SPECIFIED ON THE DRAWINGS, OR, AT LEAST 13mm DIAMETER IF NOT SPECIFIED ON THE DRAWINGS.
3. ***ANCHOR BOLTS :*** BOLTS ANCHORED IN CONCRETE, IF NOT SPECIFIED ON THE DRAWINGS, SHALL BE 13mm DIAMETER WITH 225mm EMBEDDED AND SHALL CONFORM TO ASTM A-36.
4. ***ENCASED STEEL :*** STEEL COMPLETELY ENCASED IN CONCRETE SHALL NOT BE PAINTED AND SHALL HAVE A CLEAN SURFACE FOR BONDING TO CONCRETE.

ALUMINUM

1. ***APPLICABLE SPECIFICATIONS AND CODES :*** ALUMINUM CONSTRUCTION SHALL CONFORM TO CAN3-S157 ''STRENGTH DESIGN IN ALUMINUM'' AS SPECIFIED IN THE NATIONAL BUILDING CODE.
2. ALUMINUM PLACED IN CONTACT WITH CONCRETE, MORTAR, PLASTER OR DISSIMILAR METALS SHALL BE GIVEN A PROTECTIVE SEALING COAT OF ZINC CHROMATE EPOXY OR ALKALI-RESISTANT BITUMINOUS PAINT.

MASONRY

1. ***APPLICABLE SPECIFICATIONS AND CODES :*** MASONRY CONSTRUCTION SHALL CONFORM TO CAN3-S157 AS SPECIFIED IN THE NATIONAL BUILDING CODE.
2. VERTICAL REINFORCING SHALL BE 1 - 15M BARS FOR FULL HEIGHT OF WALL IN A CAVITY AT MAXIMUM 0.60 METRE SPACING C/C AND AT ALL CORNERS, AND 1-15M ADJACENT TO OPENINGS LARGER THAN 600mm.
3. HORIZONTAL REINFORCING SHALL BE "DURWALL" OR "WAL-LOK" STANDARD WT BRIGHT FINISH AT 400mm SPACING AND 2-15M HORIZONTAL REINFORCING CONTINUOUS IN BOND BEAMS SPACED 1200 C/C AND IN LINTELS FOR OPENINGS OF LESS THAN 1200 WITH 400 BEARINGS ON BOTH SIDES OF OPENINGS.
4. FOR MORE INFORMATION SEE S3 DRAWING.

STRUCTURAL LEGEND

- NEW CONCRETE
- EXISTING CONCRETE
- TOP REINFORCING (PLAN VIEW)
- BOTTOM REINFORCING (PLAN VIEW)

CONCRETE

1. ***APPLICABLE SPECIFICATIONS AND CODES :*** CONCRETE CONSTRUCTION SHALL CONFORM TO CSA 23.3-04 "DESIGN OF CONCRETE STRUCTURES FOR BUILDING" AS SPECIFIED IN THE NATIONAL BUILDING CODE OF CANADA 2005.
2. ***REINFORCING STEEL DETAILS :*** ALL DETAILING, FABRICATING AND ERECTION OF STEEL REINFORCING BARS, UNLESS OTHERWISE NOTED, SHALL BE IN ACCORDANCE WITH THE "METRIC SUPPLEMENT" IN CONJUNCTION WITH THE "REINFORCING STEEL MANUAL OF STANDARD PRACTICE", AS AVAILABLE FROM THE WESTERN REINFORCING CONTRACTORS ASSOCIATION.
3. ***MINIMUM REINFORCING :*** CONCRETE CONSTRUCTION SHALL BE REINFORCED CONCRETE EXCEPT WHERE PLAIN CONCRETE (P/C) IS SPECIFIED ON THE DRAWINGS, IN WHICH CASE NO REINFORCEMENT SHALL BE USED. CONCRETE THAT IS NOT DESIGNATED P/C AND HAS NO REINFORCEMENT INDICATED SHALL BE REINFORCED ACCORDING TO THE FOLLOWING SCHEDULES :

   A) STEEL FOR WALLS AND SLABS

THICKNESS	REINFORCEMENT EACH WAY SIZE	SPACING	POSITION
150	10M	300 C/C	ON ℄
200	15M	300 C/C	ON ℄
250	15M	300 C/C	EF
300	15M	300 C/C	EF
350	15M	250 C/C	EF
400	20M	300 C/C	EF
450	20M	250 C/C	EF

   MASS CONCRETE SHALL BE REINFORCED WITH 15M BARS AT 300 MINIMUM IN ALL FACES.

   B) 10M @ 450 SHALL BE USED AS TRANSVERSE TIES IF NO OTHER REINFORCING IS NOTED.

4. ***CONCRETE COVER :*** CONCRETE COVER OF REINFORCING BARS, IF NOT SPECIFIED ON THE DRAWINGS, SHALL BE AS FOLLOWS OR SHALL BE EQUAL TO THE DIAMETER OF THE MAIN REINFORCING BAR IT COVERS, WHICHEVER IS LARGER :

	CONDITION	SPECIFIED COVER (mm)
A)	CONCRETE CAST AGAINST GROUND	75
B)	CONCRETE EXPOSED TO EARTH, LIQUIDS OR WEATHER	
	i) 20M BARS OR LARGER	50
	ii) 10M AND 15M BARS	40
C)	CONCRETE SLABS OR WALLS NOT EXPOSED TO EARTH, LIQUIDS OR WEATHER	20
D)	CONCRETE BEAMS OR COLUMNS	50

5. REINFORCING BAR DEVELOPMENT AND LAP LENGTHS REINFORCING BAR DEVELOPMENT LENGTH AND LAP SPLICE LENGTHS SHALL BE AS SPECIFIED ON THE DRAWINGS OR IN ACCORDANCE WITH THE FOLLOWING SCHEDULES, WHICHEVER IS THE LONGER LENGTH :

   i) DOWELS SHALL BE THE SAME SIZE AND SPACING AS BARS WITH WHICH THEY ARE LAPPED, UNLESS OTHERWISE NOTED.

   ii) THE LENGTH OF LAP SPLICE OF BARS OF DIFFERENT DIAMETERS SHALL BE BASED ON THE BAR WITH THE SMALLER DIAMETER.

6. ***STANDARD HOOK :*** BARS ENDING IN RIGHT ANGLE BENDS OR HOOKS SHALL CONFORM TO THE REQUIREMENTS OF CSA CAN3-A23.1
7. ***ANCHORAGE :*** IF THE EMBEDMENT LENGTH IS LIMITED DUE TO THE LIMITED EXTENT OF THE CONCRETE STRUCTURE, THE BARS SHALL EXTEND AS FAR AS POSSIBLE AND END IN STANDARD HOOKS.

WOOD

1. ALL LUMBER AND WOOD PRODUCTS SHALL CONFORM TO B.C.B.C. 2006 PART 9 SECTION 9.3.2 "GRADES", 9.4.1 ''GENERAL DESIGN", 9.4.2 "SNOWLOADS" AND 9.4.3 "DEFLECTIONS".
2. BUILDINGS AND THEIR STRUCTURAL MEMBERS MADE OF WOOD SHALL CONFORM TO CAN3-086 "ENGINEERING DESIGN IN WOOD, (WORKING STRESS DESIGN)", OR CAN/CSA 086.1 "ENGINEERING DESIGN IN WOOD, (LIMIT STATE DESIGN)".
3. WOOD FRAME CONSTRUCTION SHALL CONFORM TO B.C.B.C. 2006 PART 9 SECTION 9.23
4. WOOD TRUSSES SHALL BE DESIGNED, BUILT AND INSTALLED IN CONFORMANCE WITH B.C.B.C. 2006 PART 9 SECTION 9.23.13.11 ''ROOF TRUSSES".

NOTE :
WHERE DETAIL(S) SHOWN ON THE DRAWINGS DIFFER FROM THE DETAILS SHOWN ON THIS SHEET (S1), THEN THE DRAWING HAS PRIORITY.

WHISTLER

FILE: P:\Redwgs\WHISTLER\179-75-1\STRUCTURAL\179-75-1 S1.dwg Tab Model 11-01-14 dchen

PLOT: FULL 1:50 HALF 1:100

AutoCAD DRAWING

REVISIONS

ISSUE	DATE	DRAWN	CHK'D	APP'D	DESCRIPTION	ISSUE	DATE	DRAWN	CHK'D	APP'D	DESCRIPTION
A	MAY12/08	KS	MR	MR	ISSUED FOR TENDER						
B	JUL8/08	KS	MR	MR	ISSUED FOR CONSTRUCTION						
C	DEC15/09	AS	WB	WB	RECORD DRAWING						

DESIGNED MR
DRAWN DBC
CHECKED MR

Dayton & Knight Ltd.
CONSULTING ENGINEERS
#210-889 HARBOURSIDE DR., NORTH VANCOUVER, B.C. V7P 3S1
TEL.: (604) 990-4800 FAX: (604) 990-4805 www.dayton-knight.com

RESORT MUNICIPALITY OF WHISTLER
RAINBOW PARK PUMP STATION
GENERAL CONSTRUCTION NOTES

SCALE: NONE
DRAWING No. 179.75.1
SHEET No. S1 ISSUE C

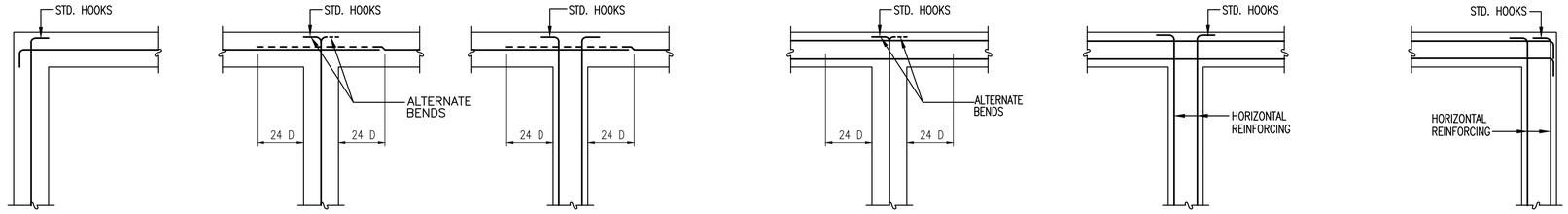

NOTE:
D = DIAMETER OF BAR

TYPICAL HORIZONTAL SECTIONS SHOWING REINFORCING FOR CONCRETE BEAM, SLAB AND WALL INTERSECTIONS AT ENDS

DETAIL A/S2

NOTE :
WHERE DETAIL(S) SHOWN ON THE DRAWINGS DIFFER FROM THE DETAILS SHOWN ON THIS SHEET (S2), THEN THE DRAWING HAS PRIORITY.

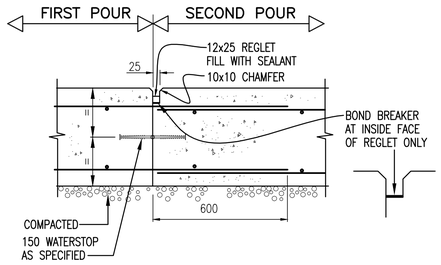

CONSTRUCTION JOINT FOR BASE SLAB FOR WATER AND SEWAGE RETAINING STRUCTURES

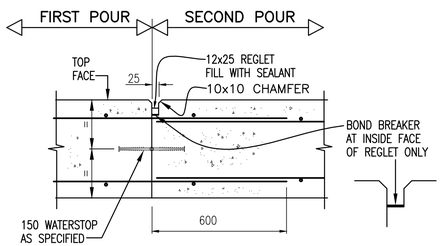

CONSTRUCTION JOINT FOR STRUCTURAL SLAB FOR WATER AND SEWAGE RETAINING STRUCTURES

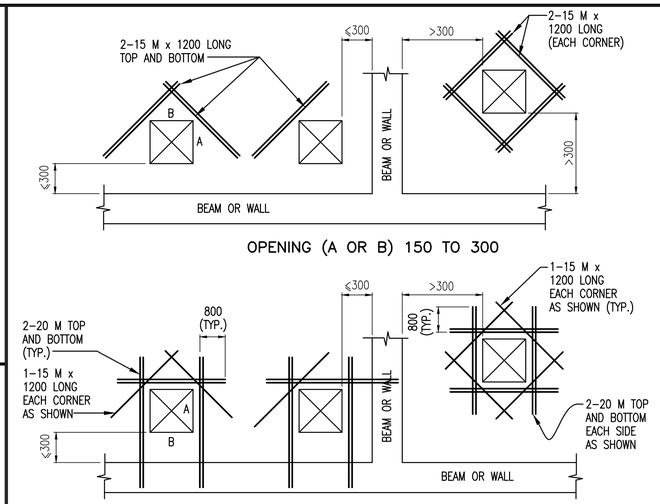

DETAIL C/S2

NOTES :
1. NUMBER OF REINFORCING BARS ARE CUT AT OPENING AND KEPT AT A MINIMUM. AS MANY BARS AS POSSIBLE DEFLECTED AROUND OPENING.
2. REINFORCING BARS ARE KEPT 50 mm CLEAR OF OPENING.
3. CIRCULAR OPENINGS ARE TREATED IN SAME MANNER AS RECTANGULAR ULESS OTHERWISE DETAILED.

ADDITIONAL REINFORCING AROUND OPENING IN CONCRETE SLAB

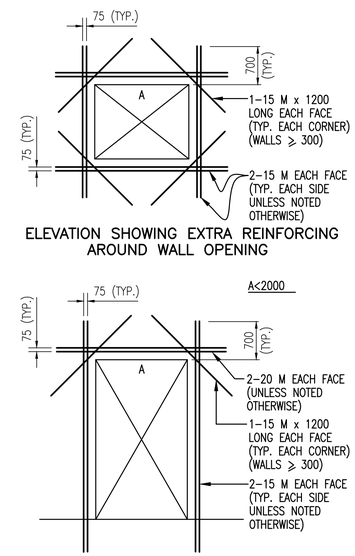

ADDITIONAL REINFORCING AROUND OPENING

DETAIL D/S2

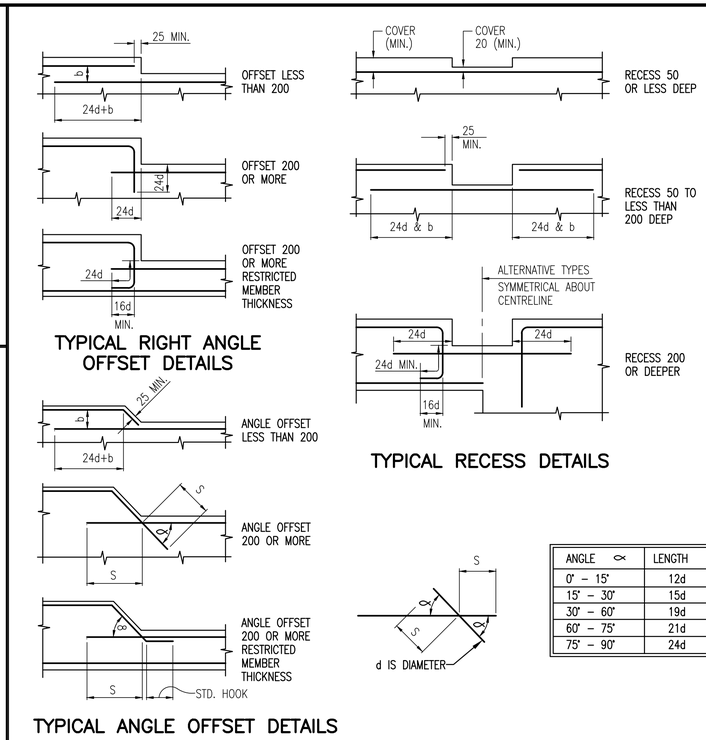

ANGLE ∝	LENGTH S
0° – 15°	12d
15° – 30°	15d
30° – 60°	19d
60° – 75°	21d
75° – 90°	24d

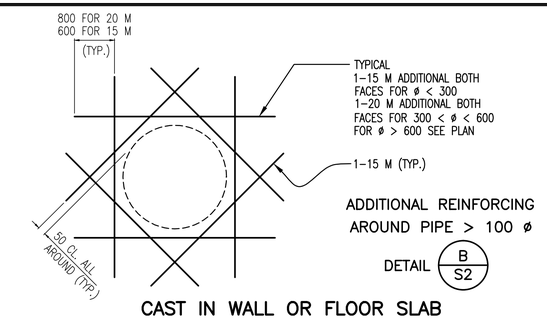

ADDITIONAL REINFORCING AROUND PIPE > 100 ø

DETAIL B/S2

CAST IN WALL OR FLOOR SLAB

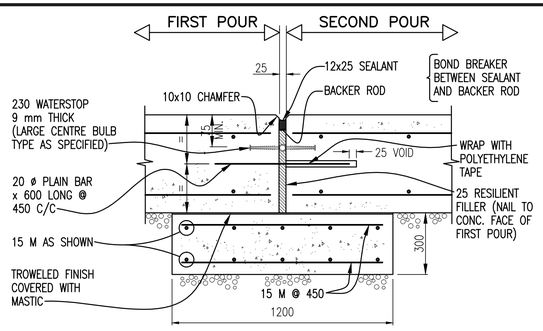

EXPANSION JOINT FOR BASE SLAB FOR WATER AND SEWAGE RETAINING STRUCTURES

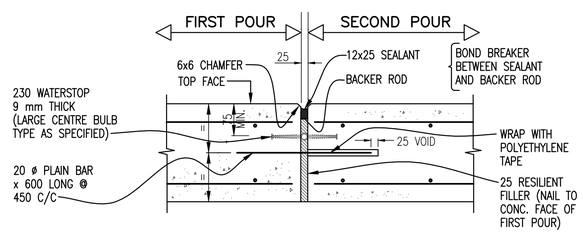

EXPANSION JOINT FOR STRUCTURAL SLAB FOR WATER AND SEWAGE RETAINING STRUCTURES

"These Record Drawings have been prepared based on information provided by the Contractor and others. Dayton & Knight Ltd. has not verified the accuracy or completeness of the information provided to them and does not warrant the accuracy or completeness of these Record Drawings. Users of these Record Drawings assume all risk of loss resulting from their use."

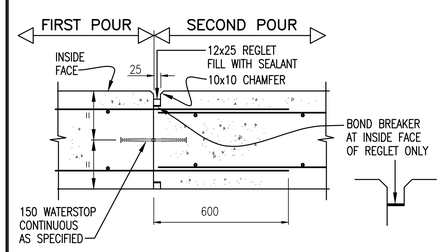

CONSTRUCTION JOINT (VERTICAL) FOR WALL FOR WATER AND SEWAGE RETAINING STRUCTURES

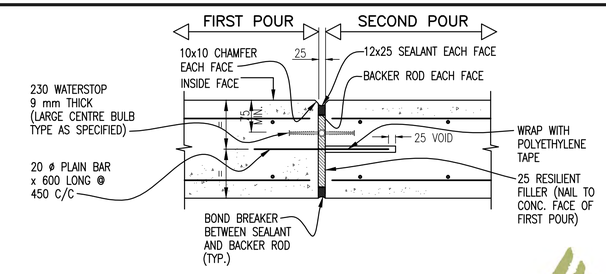

EXPANSION JOINT (VERTICAL) FOR WALL FOR WATER AND SEWAGE RETAINING STRUCTURES

WHISTLER

PLOT: FULL 1:50 HALF 1:100

FILE: P:\Recdwgs\WHISTLER\179-75-1\STRUCTURAL\179-75-1 S2.dwg Tab Model 11-01-14 dchen

AutoCAD DRAWING

REVISIONS

ISSUE	DATE	DRAWN	CHK'D	APP'D	DESCRIPTION
A	MAY12/08	KS	MR	MR	ISSUED FOR TENDER
B	JUL8/08	KS	MR	MR	ISSUED FOR CONSTRUCTION
C	DEC15/09	AS	WB	WB	RECORD DRAWING

ISSUE	DATE	DRAWN	CHK'D	APP'D	DESCRIPTION

DESIGNED MR
DRAWN DBC
CHECKED MR

Dayton & Knight Ltd.
CONSULTING ENGINEERS
#210-889 HARBOURSIDE DR., NORTH VANCOUVER, B.C. V7P 3S1
TEL.: (604) 990-4800 FAX: (604) 990-4805 www.dayton-knight.com

RESORT MUNICIPALITY OF WHISTLER
RAINBOW PARK PUMP STATION
GENERAL STRUCTURAL DETAILS

SCALE: NONE
DRAWING No. 179.75.1
SHEET No. S2 ISSUE C

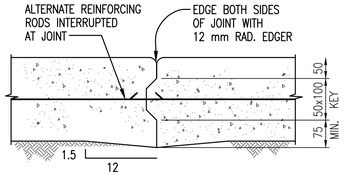

CONSTRUCTION JOINT FOR SLAB ON GRADE
(NON–WATER RETAINING STRUCTURES)

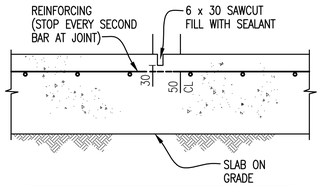

NOTE :
SLAB CONTROL JOINTS @ 5000 ± MAX. FORMING SQUARE PANELS WHEREVER POSSIBLE, OR AS SHOWN ON DRAWINGS

CONTROL JOINT FOR SLAB ON GRADE
(NON–WATER RETAINING STRUCTURES)

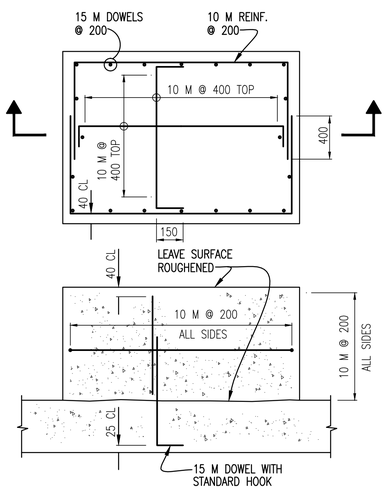

NOTE :
- PADS UNDER 900 HIGH (USE DOWELS FULL HEIGHT)
- PADS OVER 900 HIGH (LAP VERTICAL REINFORCING 400 WITH DOWELS)
- PADS LESS THAN 300 (HOOK DOWELS BOTH ENDS)
- MINIMUM OF 4 DOWELS REQUIRED PER PAD

EQUIPMENT PAD CONSTRUCTION WITH FLOOR SLAB

NOTE :
WHERE DETAIL(S) SHOWN ON THE DRAWINGS DIFFER FROM THE DETAILS SHOWN ON THIS SHEET , THEN THE DRAWING HAS PRIORITY.

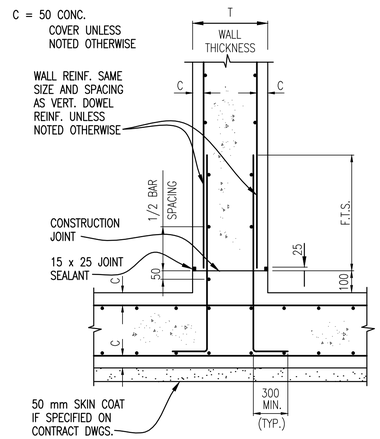

REINFORCING AT BASE SLAB TO WALL
(NON–WATER RETAINING STRUCTURES)

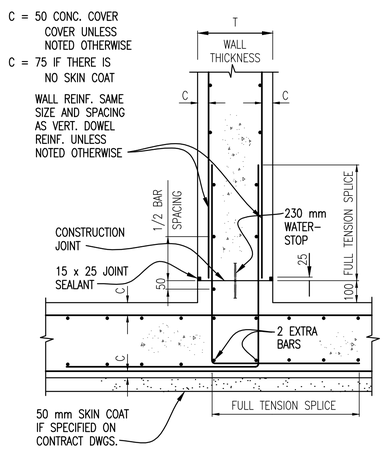

REINFORCING AT BASE SLAB TO WALL
(WATER RETAINING STRUCTURES)

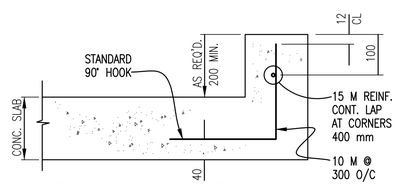

TYPICAL CURB REINFORCING

"These Record Drawings have been prepared based on information provided by the Contractor and others. Dayton & Knight Ltd. has not verified the accuracy or completeness of the information provided to them and does not warrant the accuracy or completeness of these Record Drawings. Users of these Record Drawings assume all risk of loss resulting from their use."

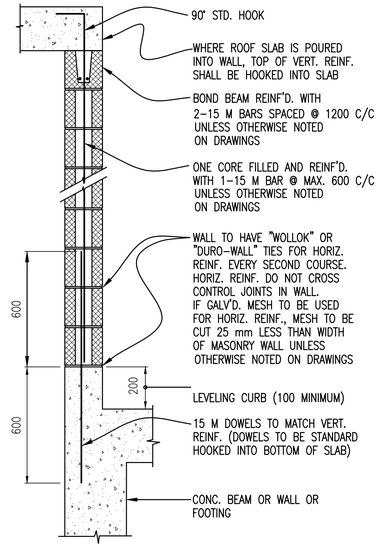

NOTES :
1. LINTEL IS REQUIRED FOR TOP OF OPENING. SEE LINTEL DETAILS.
2. PROVIDE VERTICAL REINFORCING FOR BOTH SIDES OF OPENING IN WALL AND EACH CORNER OF WALLS.
3. PROVIDE BOND BEAM ABOVE AND BELOW OPENINGS IN WALL AND EXTEND BOND BEAM 800 mm BEYOND EDGES.
4. FILL FOR BLOCKS AND BOND BEAMS TO BE 30 MPa CONCRETE.
5. TYPE S MORTAR TO BE USED FOR ALL JOINTS.

TYPICAL MASONRY WALL ANCHORING TO CONCRETE AT BASE
STANDARD MASONRY BLOCKS

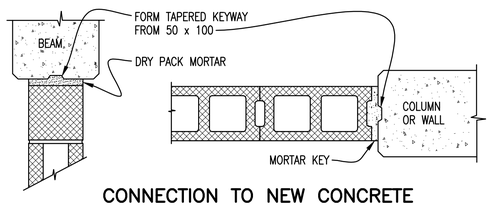

CONNECTION TO NEW CONCRETE
STANDARD MASONRY BLOCKS

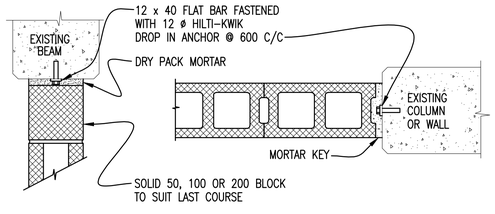

CONNECTION TO EXISTING CONCRETE

STANDARD MASONRY BLOCKS

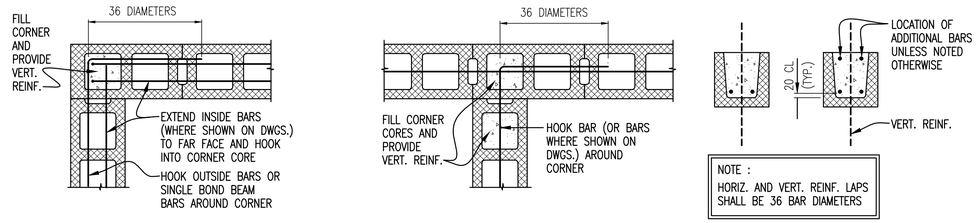

EXTERIOR BOND BEAM — INTERIOR BOND BEAM — TYPICAL HORIZONTAL BOND BEAMS

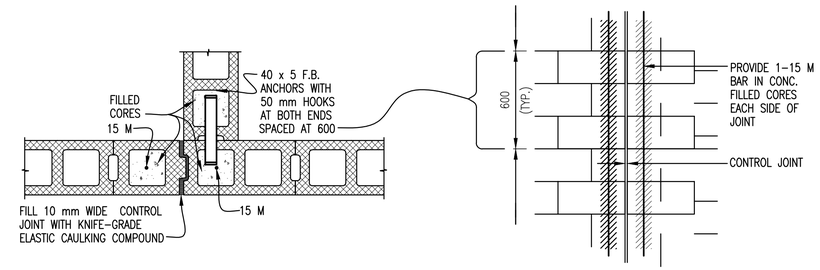

CONTROL JOINT BLOCKS AND ANCHORS — ELEVATION

CONNECTION AND CONTROL JOINTS
STANDARD MASONRY BLOCKS

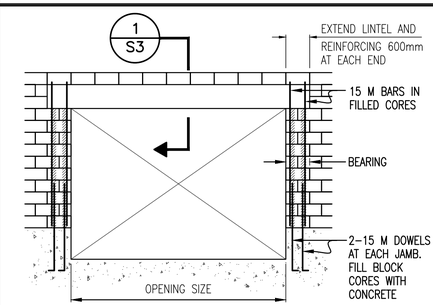

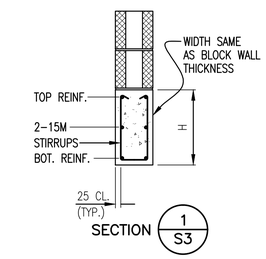

NOTES :
1. EXTEND LINTEL AND REINFORCING 400mm AT EACH END.
2. COMPRESSIVE STRENGTH OF CONCRETE TO BE 30 MPa.
3. FOR BOTTOM REINFORCING USE BAR SPACER WHEN 3 OR 4 BARS REQUIRED.

OPENING SIZE	H	BOTTOM REINF.	TOP REINF.	STIRRUPS	BEARING
2400 TO 3000	400	3–20 M	2–15 M	10 M @ 300 C/C	400
3000 TO 3600	400	2–25 M	2–15 M	10 M @ 300 C/C	400
3600 TO 4200	600	2–25 M + 1–20 M	2–15 M	10 M @ 250 C/C	400
4200 TO 4800	600	2–25 M + 2–20 M	2–20 M	10 M @ 200 C/C	400

POURED CONCRETE LINTEL IN BLOCK WALL

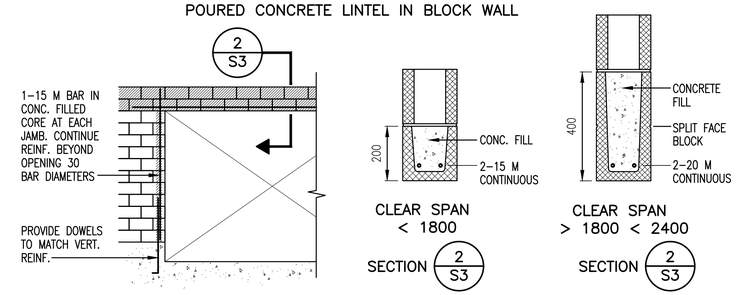

NOTES :
1. PROVIDE MIN. 400 mm BEARING EACH END OF LINTELS. FILL CORES WITH CONCRETE AND 1–15 M BAR VERTICAL TO EACH END.
2. ALL CONCRETE FILL TO BE 30 MPa.

LINTEL DETAILS – STANDARD MASONRY BLOCKS

NOTE : FOR GIANT BRICK, USE SAME MASONRY DETAILS

WHISTLER

PLOT: FULL 1:50 HALF 1:100

FILE: P:\Recdwgs\WHISTLER\179-75-1\STRUCTURAL\179-75-1 S3.dwg Tab Model 11-01-14 dchen

AutoCAD DRAWING

REVISIONS	ISSUE	DATE	DRAWN	CHK'D	APP'D	DESCRIPTION	ISSUE	DATE	DRAWN	CHK'D	APP'D	DESCRIPTION
	A	MAY12/08	KS	MR	MR	ISSUED FOR TENDER						
	B	JUL8/08	KS	MR	MR	ISSUED FOR CONSTRUCTION						
	C	DEC15/09	AS	WB	WB	RECORD DRAWING						

DESIGNED MR
DRAWN DBC
CHECKED MR

Dayton & Knight Ltd.
CONSULTING ENGINEERS
#210-889 HARBOURSIDE DR., NORTH VANCOUVER, B.C. V7P 3S1
TEL.: (604) 990-4800 FAX: (604) 990-4805 www.dayton-knight.com

RESORT MUNICIPALITY OF WHISTLER
RAINBOW PARK PUMP STATION
GENERAL STRUCTURAL AND MASONRY DETAILS

SCALE: NONE
DRAWING No. 179.75.1
SHEET No. S3 ISSUE C

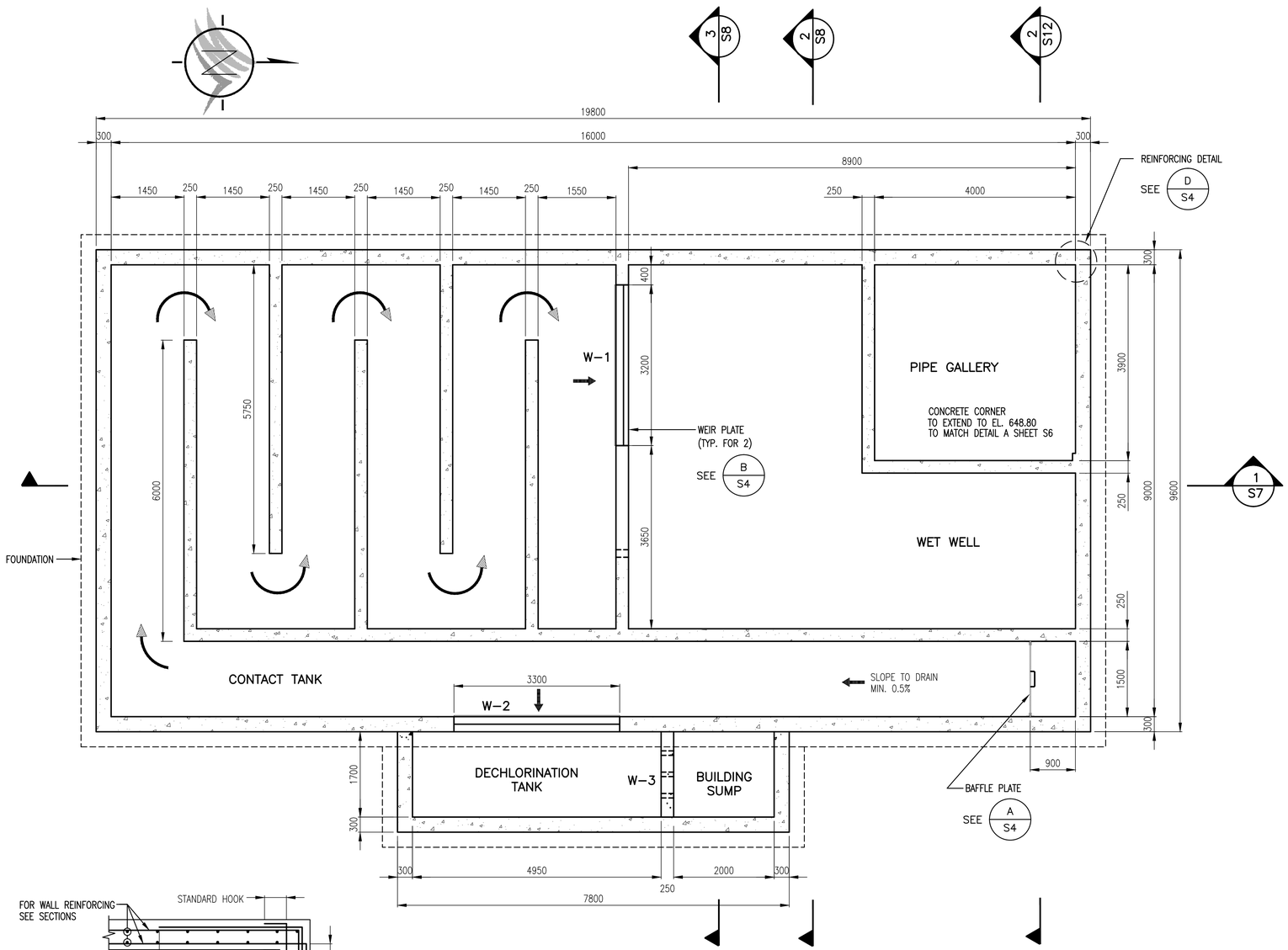

FLOOR PLAN @ EL. 648.80
1:50

WEIR ELEVATIONS				
WEIR No.	LENGTH (mm)	STEEL PLATE	TOP OF CONC. ELEV. (m)	TOP OF WEIR PLATE ELEV. (m)
W-1	3200	YES	651.20	651.40
W-2	3300	YES	651.35	651.55
W-3	1700	NO	651.35	651.35

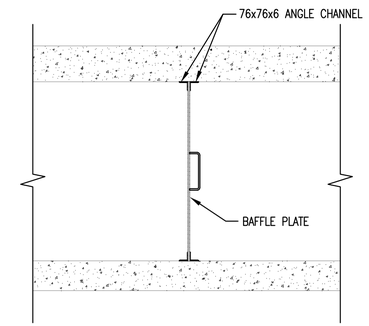

PLAN – BAFFLE WALL

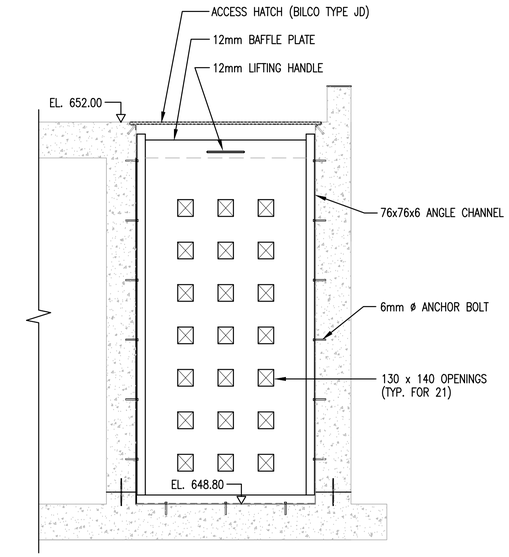

ELEVATION – BAFFLE PLATE

DETAIL A S4 1:25 (ALL TO BE 316 SS MATERIALS)

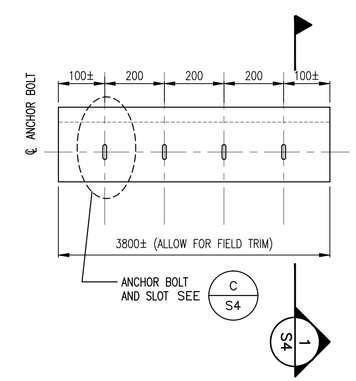

WEIR PLATE W-1 & W-2
(ALL 316 SS MATERIALS)
NOTE: W-3 DOES NOT HAVE A WEIR PLATE

DETAIL B S4 NTS

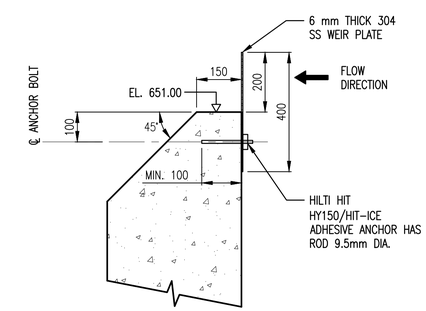

SECTION 1 S4 NTS

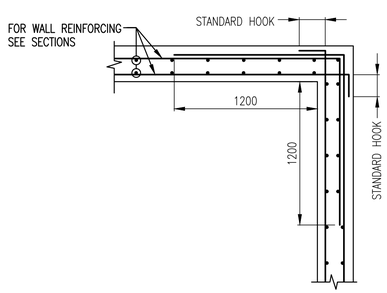

TYPICAL REINFORCING AT WALL CORNER BELOW EL. 652.00

DETAIL D S4 1:25

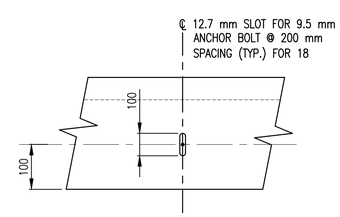

ANCHOR BOLT AND SLOT DETAIL

DETAIL C S4 NTS

"These Record Drawings have been prepared based on information provided by the Contractor and others. Dayton & Knight Ltd. has not verified the accuracy or completeness of the information provided to them and does not warrant the accuracy or completeness of these Record Drawings. Users of these Record Drawings assume all risk of loss resulting from their use."

WHISTLER

PLOT: FULL 1:1 HALF 1:2

FILE: P:\Recdwgs\WHISTLER\179-75-1\STRUCTURAL\179-75-1 S4.dwg Tab S4 11-01-14 dchen

AutoCAD DRAWING

REVISIONS	ISSUE	DATE	DRAWN	CHK'D	APP'D	DESCRIPTION	ISSUE	DATE	DRAWN	CHK'D	APP'D	DESCRIPTION
	A	MAY12/08	KS	MR	MR	ISSUED FOR TENDER						
	B	JUL8/08	KS	MR	MR	B ISSUED FOR CONSTRUCTION						
	C	DEC15/09	AS	WB	WB	RECORD DRAWING						

DESIGNED MR
DRAWN KS
CHECKED MR

Dayton & Knight Ltd.
CONSULTING ENGINEERS
#210-889 HARBOURSIDE DR., NORTH VANCOUVER, B.C. V7P 3S1
TEL.: (604) 990-4800 FAX: (604) 990-4805 www.dayton-knight.com

RESORT MUNICIPALITY OF WHISTLER
RAINBOW PARK PUMP STATION
STRUCTURAL – FLOOR PLAN @ EL. 648.80 – DETAILS

SCALE: AS SHOWN
DRAWING No. 179.5.1
SHEET No. S4 ISSUE C

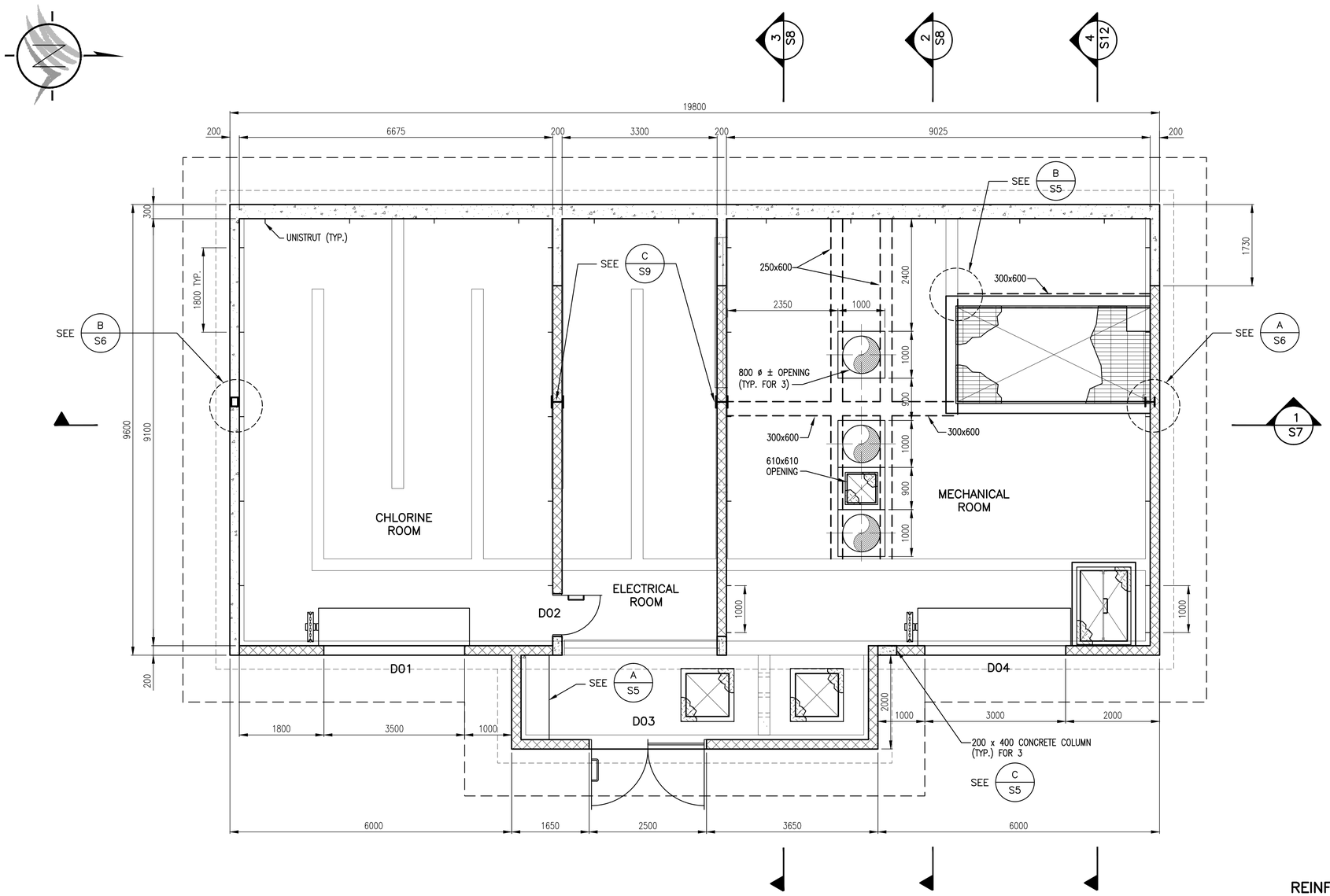

FLOOR PLAN @ EL. 652.00
1:50

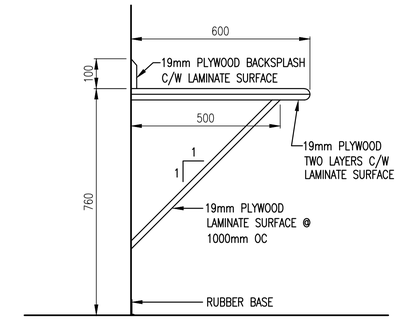

WORKBENCH DETAIL

DETAIL A S5
NTS

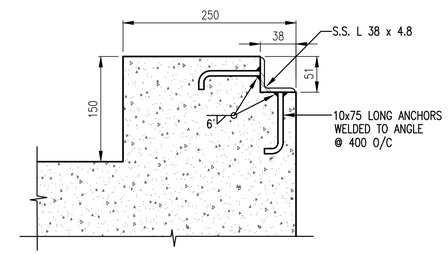

GRATING SUPPORT DETAIL

DETAIL B S5
NTS

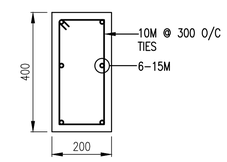

NOTES:

1. STEEL BAR IN BLOCK BOND BEAM SHOULD GO THROUGH OR ANCHOR MIN. 300mm WITH 200mm HOOK INTO CONCRETE COLUMN OR CONCRETE WALL, UNLESS OTHERWISE NOTED.

REINFORCING DETAILS FOR
200 x 400 CONCRETE COLUMN

DETAIL C S5
1:10

(SEE NOTE 1 THIS SHEET)

NOTE :
WALL FOOTINGS BELOW GRADE NOT SHOWN FOR CLARITY

"These Record Drawings have been prepared based on information provided by the Contractor and others. Dayton & Knight Ltd. has not verified the accuracy or completeness of the information provided to them and does not warrant the accuracy or completeness of these Record Drawings. Users of these Record Drawings assume all risk of loss resulting from their use."

WHISTLER

PLOT: FULL 1:1 HALF 1:2

FILE: P:\Recdwgs\WHISTLER\179-75-1\STRUCTURAL\179-75-1 S5.dwg Tab S5 11-01-14 dchen

AutoCAD DRAWING

REVISIONS	ISSUE	DATE	DRAWN	CHK'D	APP'D	DESCRIPTION	ISSUE	DATE	DRAWN	CHK'D	APP'D	DESCRIPTION
	A	MAY12/08	KS	MR	MR	ISSUED FOR TENDER	D	DEC17/09	AS	WB	WB	RECORD DRAWING
	B	JUL8/08	KS	MR	MR	B ISSUED FOR CONSTRUCTION						
	C	OCT8/08	KS	WB	WB	C DIMENSION REVISED						

DESIGNED MR
DRAWN KS
CHECKED MR

Dayton & Knight Ltd.
CONSULTING ENGINEERS
#210-889 HARBOURSIDE DR., NORTH VANCOUVER, B.C. V7P 3S1
TEL.: (604) 990-4800 FAX: (604) 990-4805 www.dayton-knight.com

RESORT MUNICIPALITY OF WHISTLER
RAINBOW PARK PUMP STATION
STRUCTURAL – FLOOR PLAN @ EL. 652.00 – DETAILS

SCALE: AS SHOWN
DRAWING No. 179.5.1
SHEET No. S5 ISSUE D

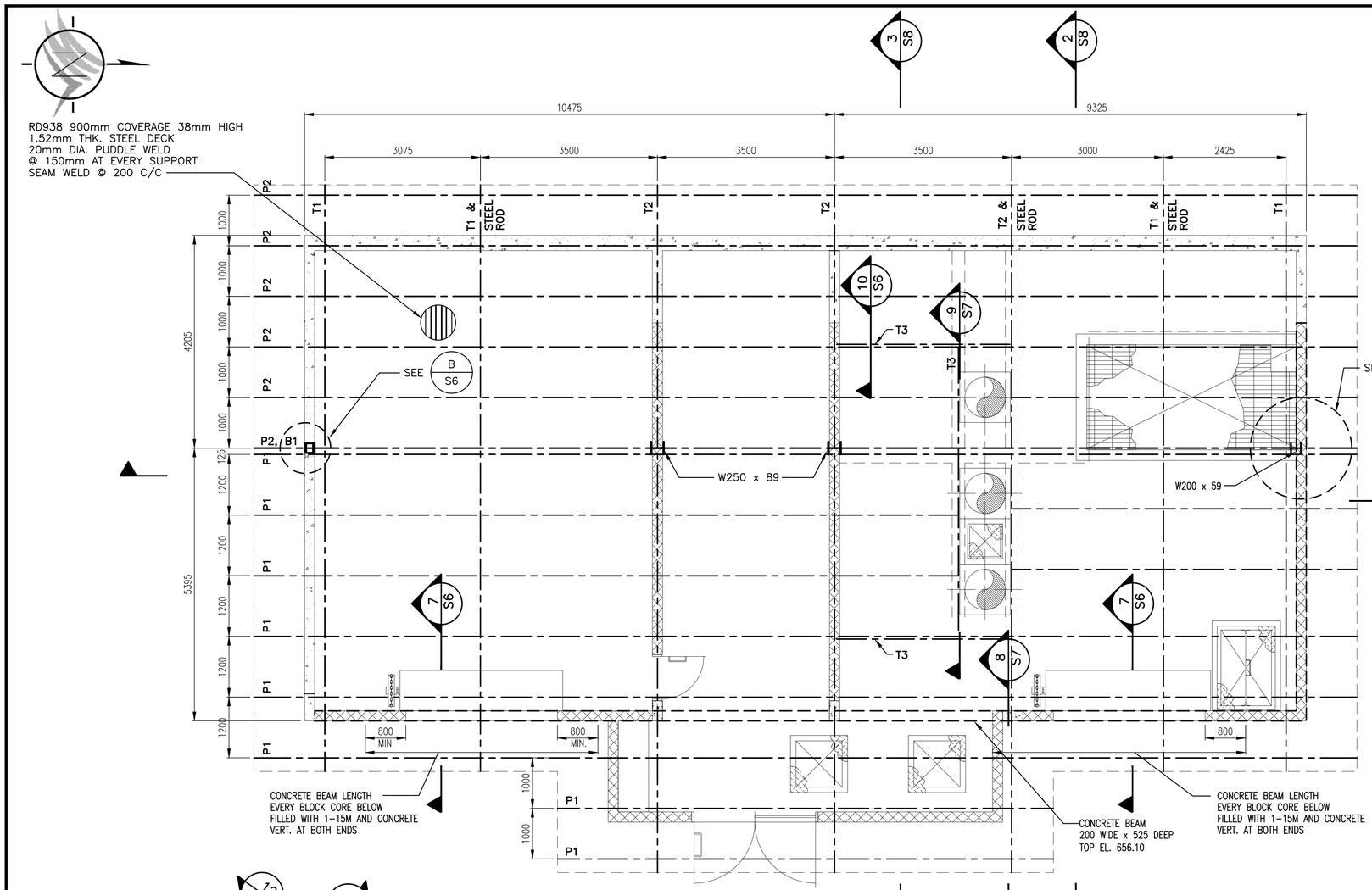

ROOF PLAN
1:50

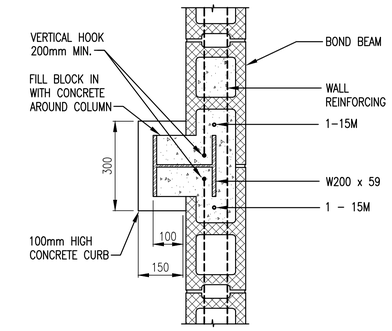

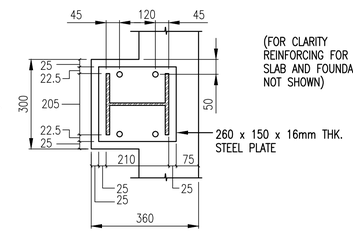

SECTION 6/S6
1:10

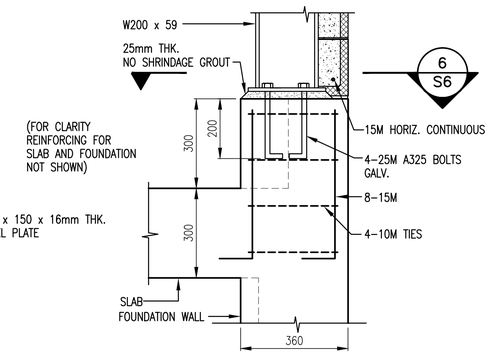

DETAIL A/S6
1:10

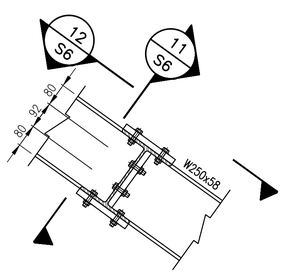

SECTION 10/S6 (4 LOCATIONS)
1:10

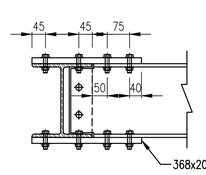

SECTION 11/S6
1:10

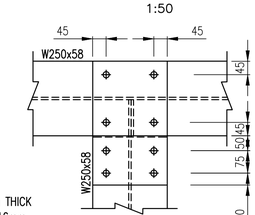

SECTION 12/S6
1:10

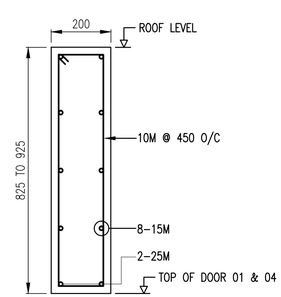

SECTION 7/S6
1:10

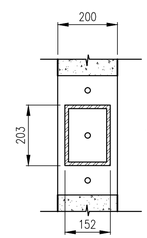

SECTION 4/S6
1:10

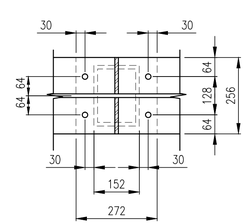

SECTION 5/S6
1:10

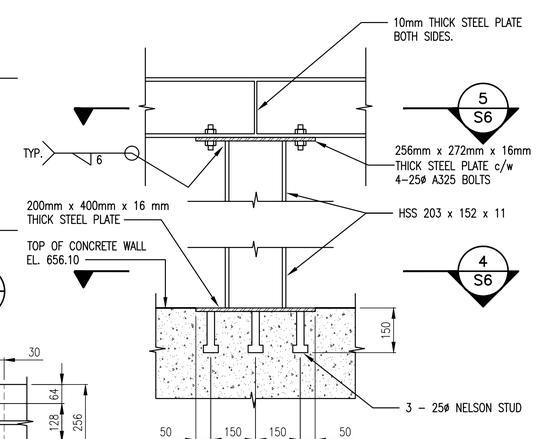

DETAIL B/S6
1:10

PURLIN SCHEDULE	BEAM SCHEDULE	ROOF TRUSS SCHEDULE
P1: MC200 x 33.9 P2: W200 x 36	B1: W460 x 113	T1: W250 x 58 T2: W250 x 58 T3: W250 x 58

"These Record Drawings have been prepared based on information provided by the Contractor and others. Dayton & Knight Ltd. has not verified the accuracy or completeness of the information provided to them and does not warrant the accuracy or completeness of these Record Drawings. Users of these Record Drawings assume all risk of loss resulting from their use."

WHISTLER

PLOT: FULL 1:1 HALF 1:2

FILE: P:\Recdwgs\WHISTLER\179-75-1\STRUCTURAL\179-75-1 S6.dwg Tab: S6 11-01-14 dchen

AutoCAD DRAWING

REVISIONS	ISSUE	DATE	DRAWN	CHK'D	APP'D	DESCRIPTION	ISSUE	DATE	DRAWN	CHK'D	APP'D	DESCRIPTION
	A	MAY12/08	KS	MR	MR	ISSUED FOR TENDER						
	B	JUL8/08	KS	MR	MR	B ISSUED FOR CONSTRUCTION						
	C	DEC15/09	AS	WB	WB	RECORD DRAWING						

DESIGNED MR
DRAWN KS
CHECKED MR

Dayton & Knight Ltd.
CONSULTING ENGINEERS
#210-889 HARBOURSIDE DR., NORTH VANCOUVER, B.C. V7P 3S1
TEL.: (604) 990-4800 FAX: (604) 990-4805 www.dayton-knight.com

RESORT MUNICIPALITY OF WHISTLER
RAINBOW PARK PUMP STATION
STRUCTURAL – ROOF PLAN

SCALE: AS SHOWN
DRAWING No. 179.5.1
SHEET No. S6 ISSUE C

"These Record Drawings have been prepared based on information provided by the Contractor and others. Dayton & Knight Ltd. has not verified the accuracy or completeness of the information provided to them and does not warrant the accuracy or completeness of these Record Drawings. Users of these Record Drawings assume all risk of loss resulting from their use."

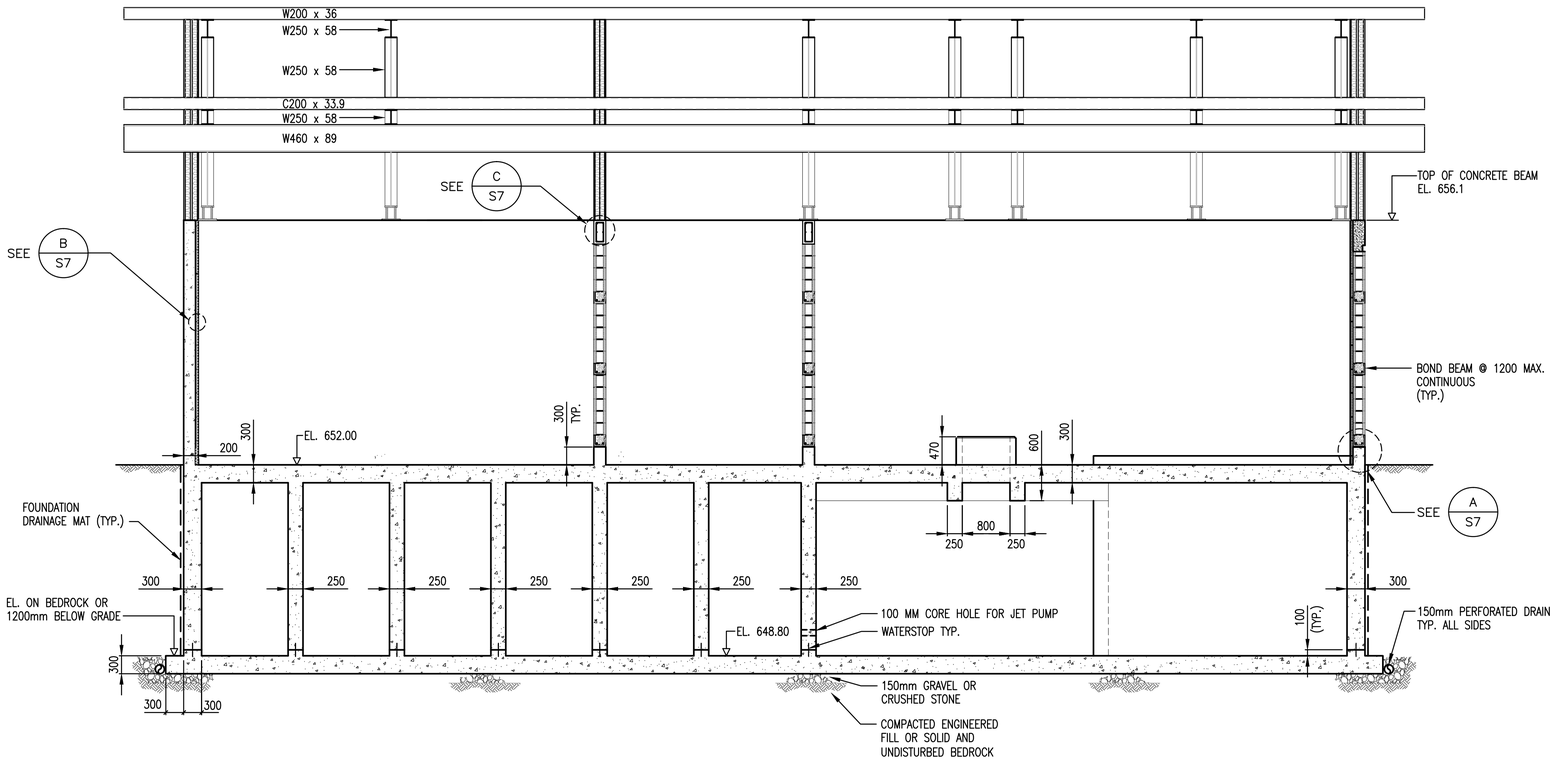

SECTION 1/S4 1/S5 1/S6
1:50

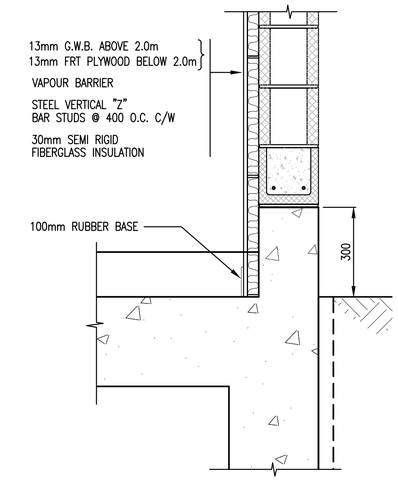

DETAIL A/S7
1:10

EXTERIOR WALL DETAIL TYP.)

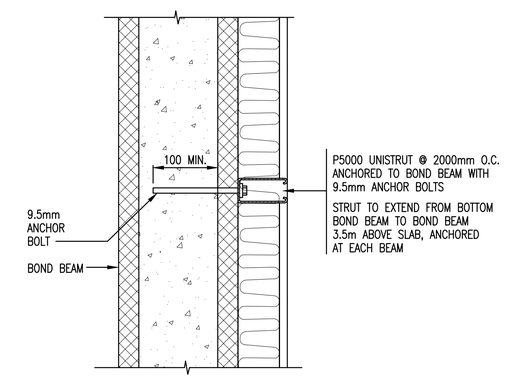

PLAN

DETAIL B/S7
1:5

METAL FRAMING DETAIL

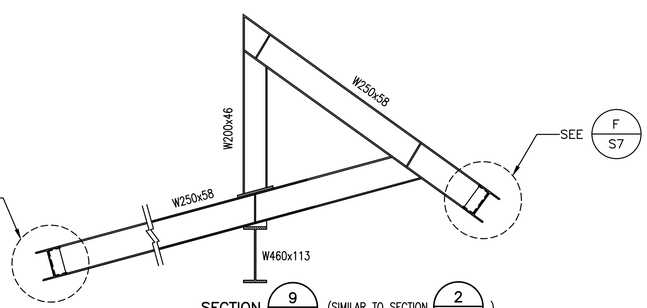

SECTION 9/S6 (SIMILAR TO SECTION 2/S8)
1:25

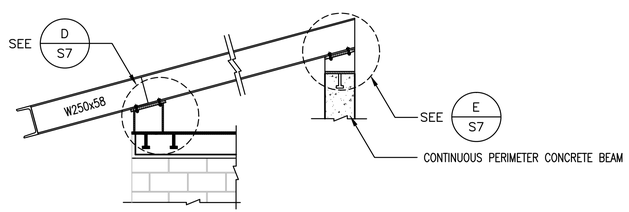

SECTION 8/S6
1:25

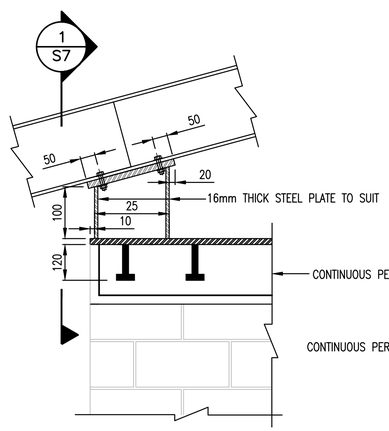

DETAIL D/S7
1:10

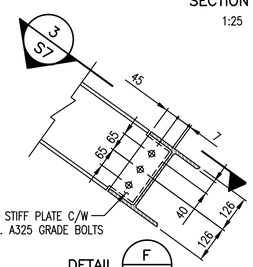

DETAIL F/S7
1:10

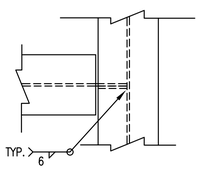

SECTION 3/S7
1:10

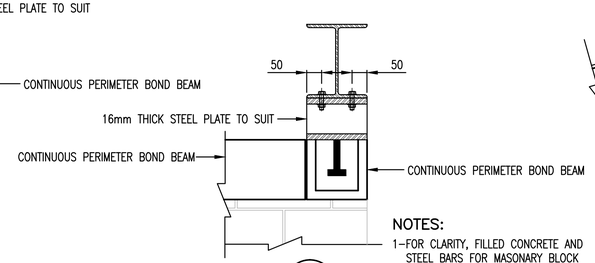

SECTION 1/S7
1:10

NOTES:
1-FOR CLARITY, FILLED CONCRETE AND STEEL BARS FOR MASONARY BLOCK AND CONCRETE BEAM ARE NOT SHOWN
2-SEE NOTES ON S8

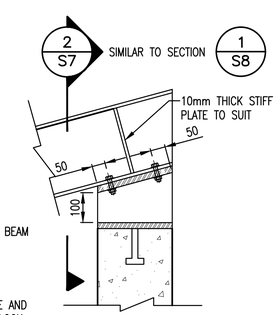

DETAIL E/S7
1:10

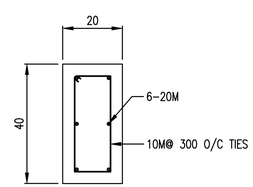

DETAIL C/S7
1:10

CONCRETE BEAM DETAIL

WHISTLER

PLOT: FULL 1:1 HALF 1:2

FILE: P:\Recdwgs\WHISTLER\179-75-1\STRUCTURAL\179-75-1 S7.dwg Tab S7 11-01-14 dchen

AutoCAD DRAWING

REVISIONS

ISSUE	DATE	DRAWN	CHK'D	APP'D	DESCRIPTION	ISSUE	DATE	DRAWN	CHK'D	APP'D	DESCRIPTION
A	MAY12/08	KS	MR	MR	ISSUED FOR TENDER						
B	JUL8/08	KS	MR	MR	B ISSUED FOR CONSTRUCTION						
C	DEC15/09	AS	WB	WB	RECORD DRAWING						

DESIGNED MR
DRAWN KS
CHECKED MR

Dayton & Knight Ltd.
CONSULTING ENGINEERS
#210-889 HARBOURSIDE DR., NORTH VANCOUVER, B.C. V7P 3S1
TEL.: (604) 990-4800 FAX: (604) 990-4805 www.dayton-knight.com

RESORT MUNICIPALITY OF WHISTLER
RAINBOW PARK PUMP STATION
STRUCTURAL – SECTION – DETAILS

SCALE: AS SHOWN
DRAWING No. 179.5.1
SHEET No. S7 ISSUE C

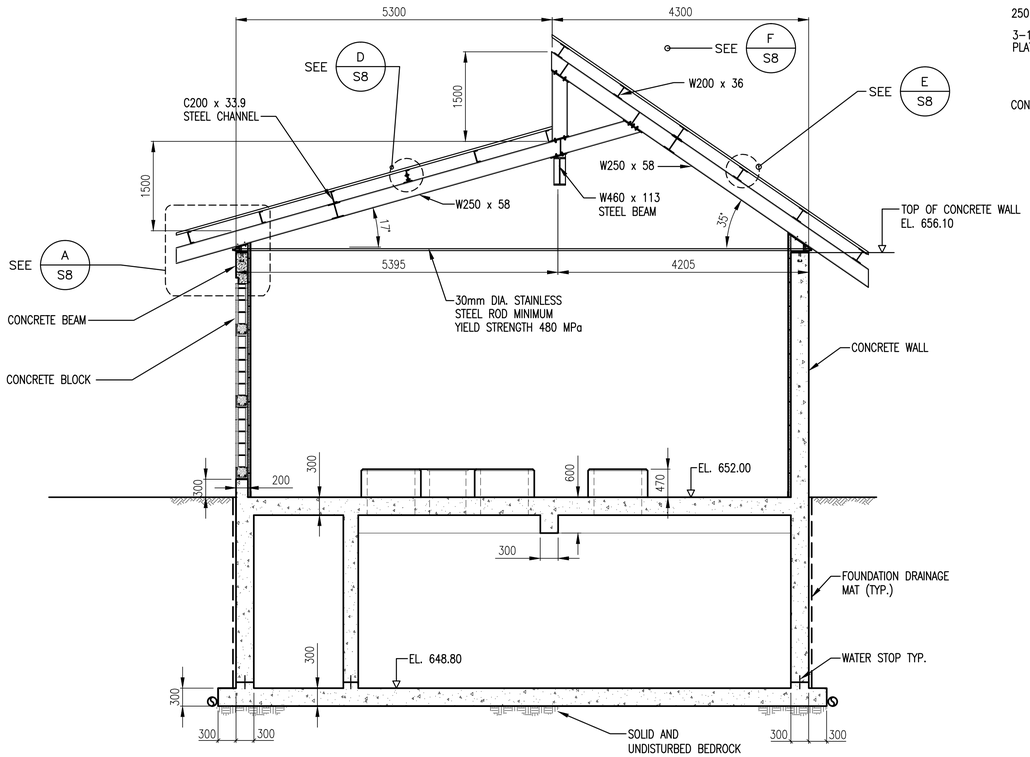

SECTION 2/S4 2/S5 2/S6
1:50

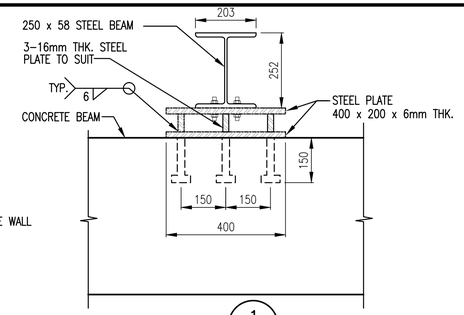

SECTION 1/S8
1:10

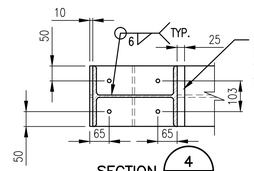

SECTION 4/S8
1:10

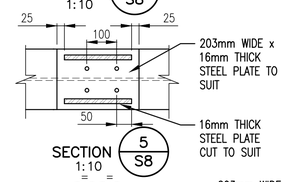

SECTION 5/S8
1:10

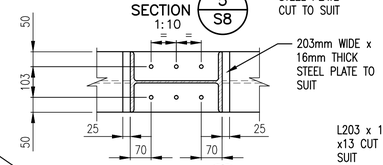

SECTION 6/S8
1:10

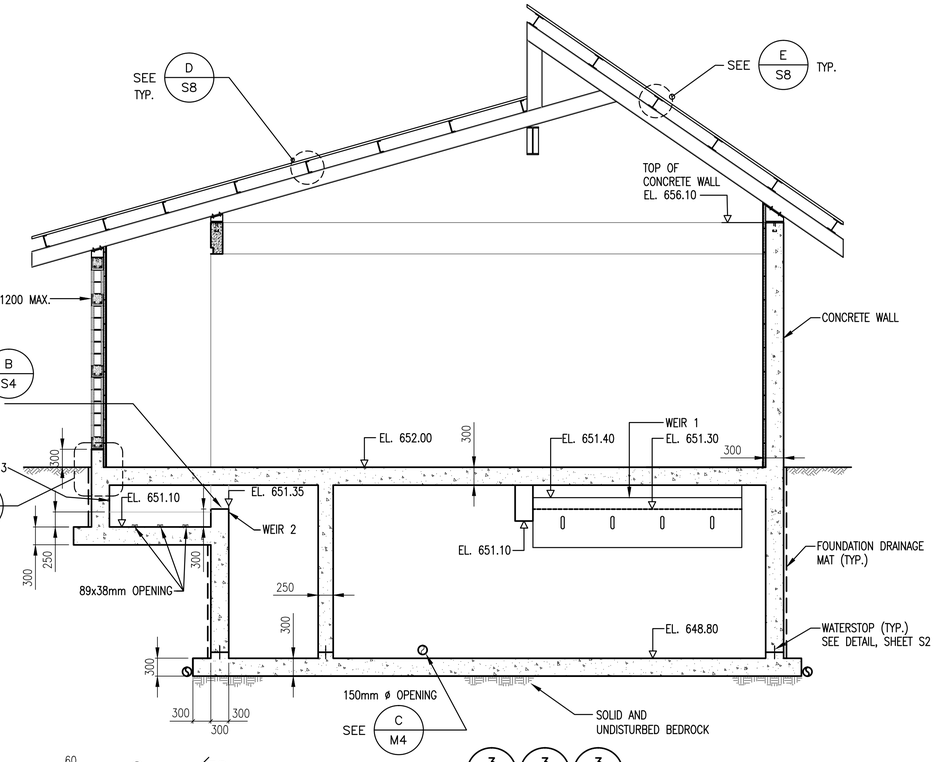

SECTION 3/S4 3/S5 3/S6
1:50

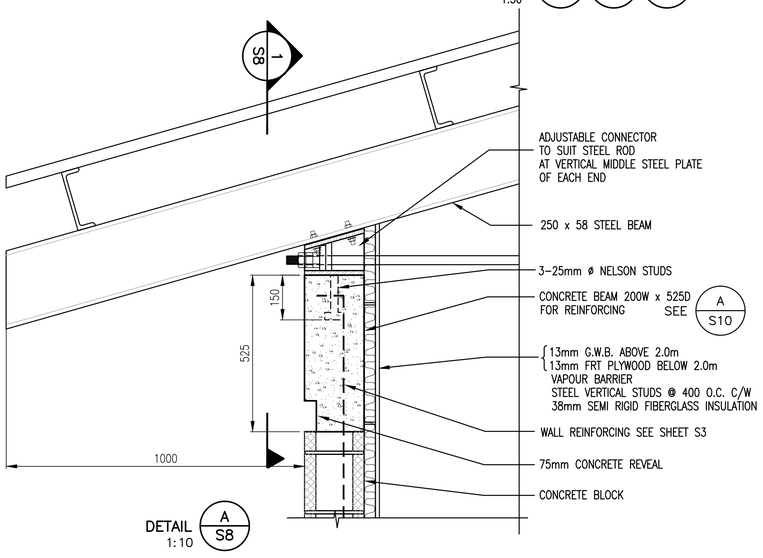

DETAIL A/S8
1:10

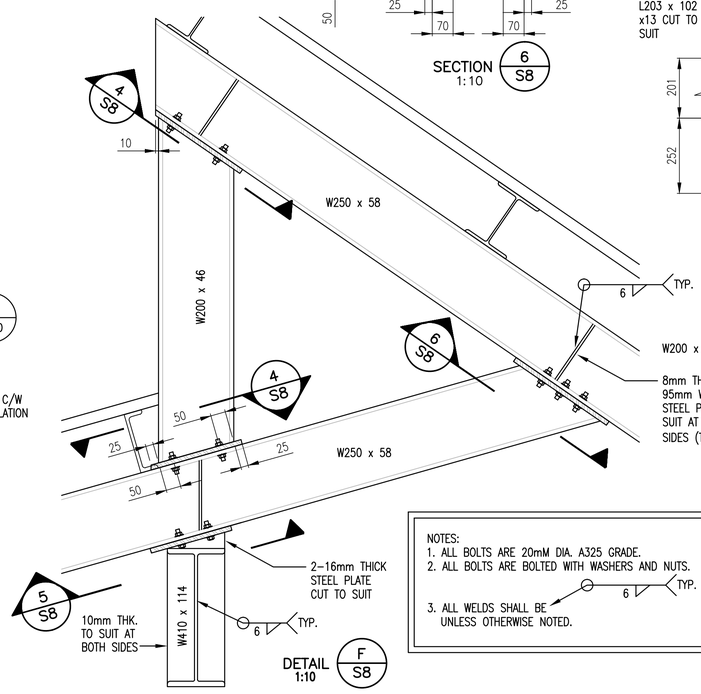

DETAIL F/S8
1:10

NOTES:
1. ALL BOLTS ARE 20mM DIA. A325 GRADE.
2. ALL BOLTS ARE BOLTED WITH WASHERS AND NUTS.
3. ALL WELDS SHALL BE UNLESS OTHERWISE NOTED. (6 TYP.)

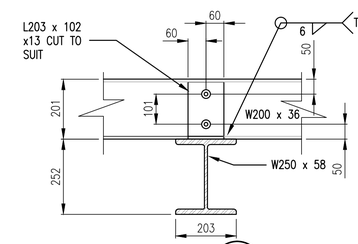

SECTION 3/S8
1:10

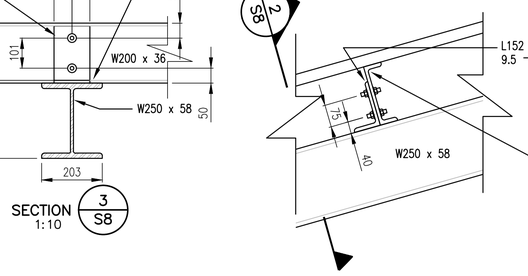

DETAIL D/S8
1:10

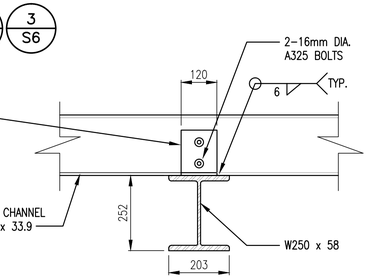

SECTION 2/S8
1:10

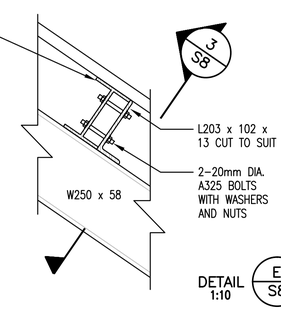

DETAIL E/S8
1:10

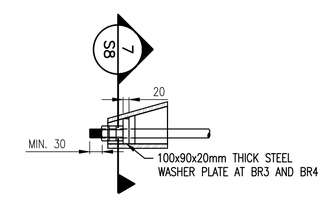

DETAILS FOR BR3 AND BR4

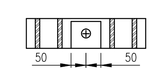

SECTION 7/S8
1:10

"These Record Drawings have been prepared based on information provided by the Contractor and others. Dayton & Knight Ltd. has not verified the accuracy or completeness of the information provided to them and does not warrant the accuracy or completeness of these Record Drawings. Users of these Record Drawings assume all risk of loss resulting from their use."

WHISTLER

PLOT: FULL 1:1 HALF 1:2

FILE: P:\Recdwgs\WHISTLER\179-75-1\STRUCTURAL\179-75-1 S8.dwg Tab S8 11-01-14 dchen

AutoCAD DRAWING

REVISIONS	ISSUE	DATE	DRAWN	CHK'D	APP'D	DESCRIPTION
	A	MAY12/08	KS	MR	MR	ISSUED FOR TENDER
	B	JUL8/08	KS	MR	MR	B ISSUED FOR CONSTRUCTION
	C	DEC15/09	AS	WB	WB	RECORD DRAWING

ISSUE	DATE	DRAWN	CHK'D	APP'D	DESCRIPTION

DESIGNED MR
DRAWN KS
CHECKED MR

Dayton & Knight Ltd.
CONSULTING ENGINEERS
#210-889 HARBOURSIDE DR., NORTH VANCOUVER, B.C. V7P 3S1
TEL.: (604) 990-4800 FAX: (604) 990-4805 www.dayton-knight.com

RESORT MUNICIPALITY OF WHISTLER
RAINBOW PARK PUMP STATION
STRUCTURAL – SECTIONS – DETAIL

SCALE: AS SHOWN
DRAWING No. 179.5.1
SHEET No. S8 ISSUE C

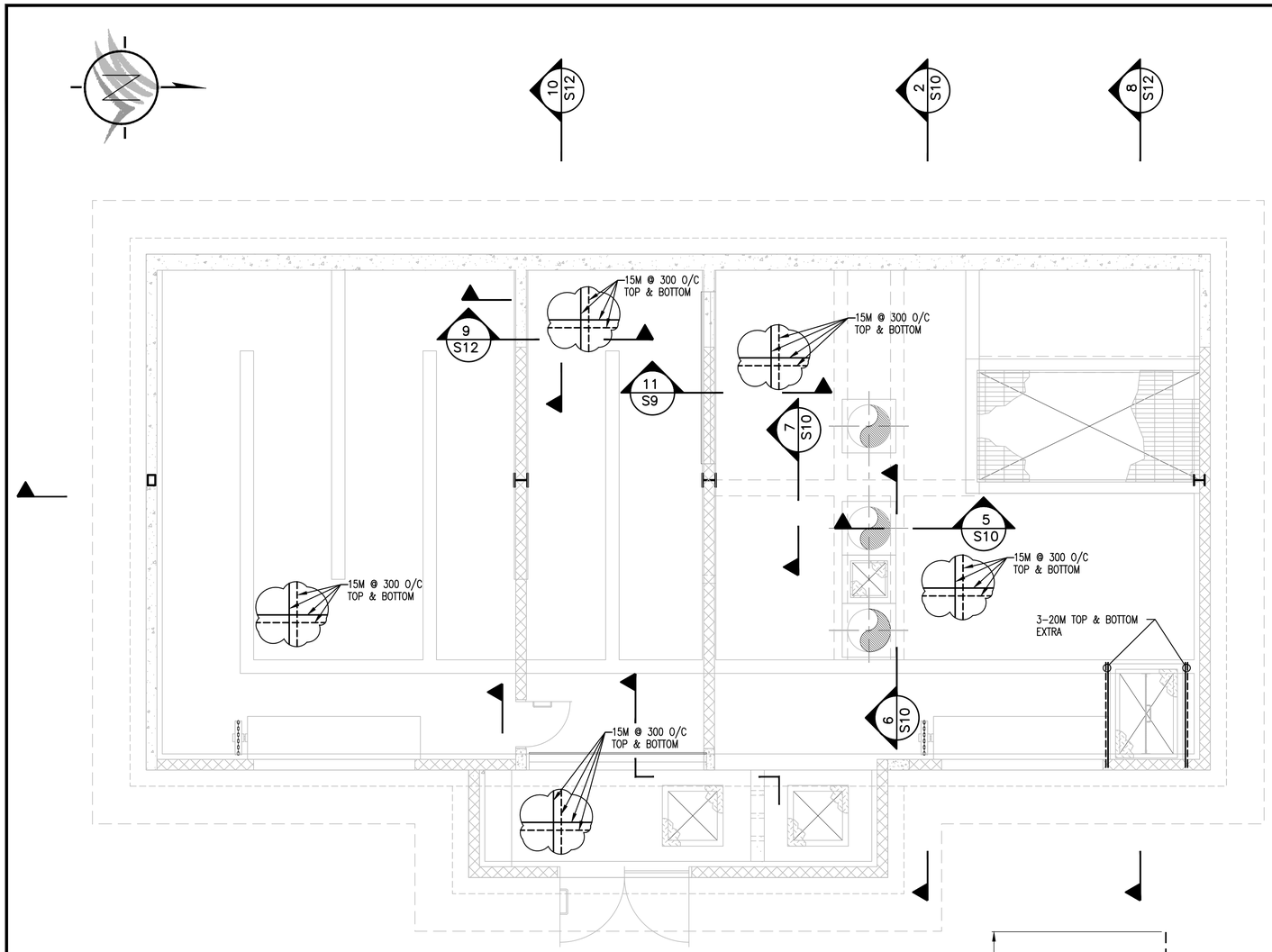

NOTES :

1. TYPICAL SLAB REINFORCING 15M @ 300 O/C TOP & BOTTOM.
2. SEE ALSO SHEET S2.
3. DESIGN LIVE LOAD 3.6 KPa

REINFORCING – FLOOR PLAN @ EL. 652.00
1:50

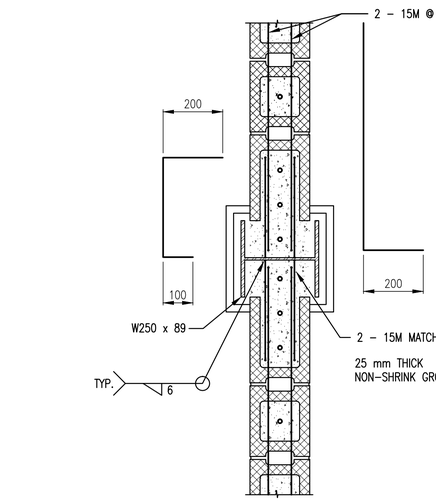

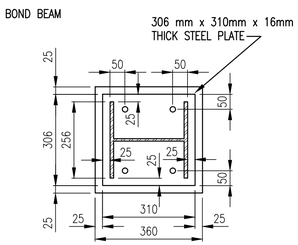

SECTION 9/S9
1:10

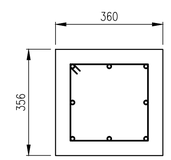

SECTION 10/S9
1:10

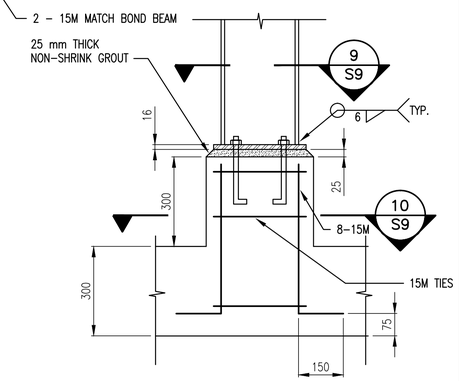

DETAIL C/S6
1:10

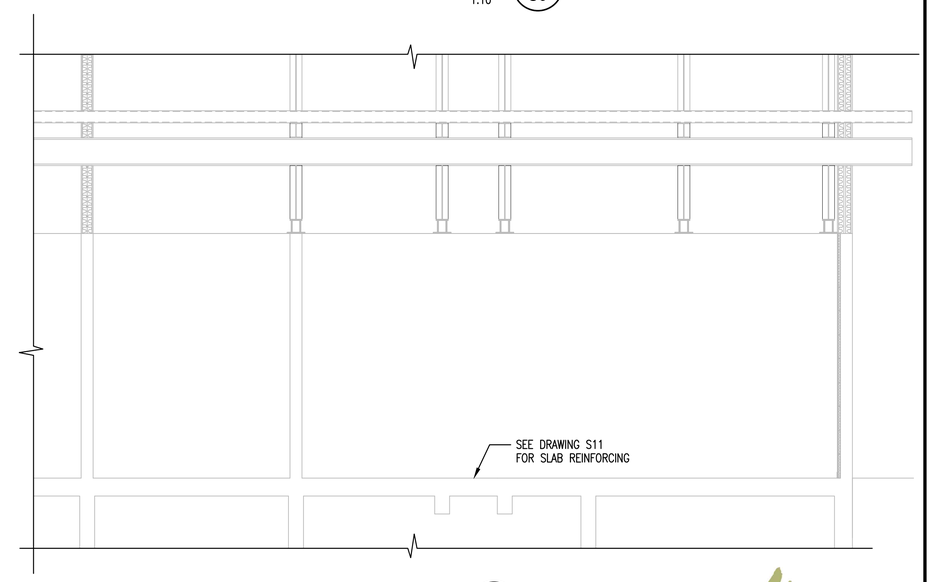

SECTION 1/S9
1:50

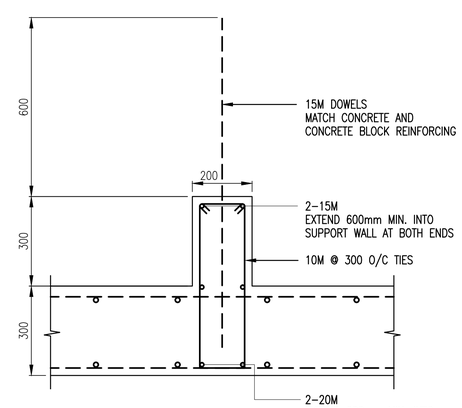

SECTION 11/S9
1:10

"These Record Drawings have been prepared based on information provided by the Contractor and others. Dayton & Knight Ltd. has not verified the accuracy or completeness of the information provided to them and does not warrant the accuracy or completeness of these Record Drawings. Users of these Record Drawings assume all risk of loss resulting from their use."

WHISTLER

PLOT: FULL 1:1 HALF 1:2

FILE: P:\Recdwgs\WHISTLER\179-75-1\STRUCTURAL\179-75-1 S9.dwg Tab S9 11-01-14 dchen

AutoCAD DRAWING

REVISIONS

ISSUE	DATE	DRAWN	CHK'D	APP'D	DESCRIPTION	ISSUE	DATE	DRAWN	CHK'D	APP'D	DESCRIPTION
A	MAY12/08	KS	MR	MR	ISSUED FOR TENDER						
B	JUL8/08	KS	MR	MR	B ISSUED FOR CONSTRUCTION						
C	DEC15/09	AS	WB	WB	RECORD DRAWING						

DESIGNED MR
DRAWN KS
CHECKED MR

Dayton & Knight Ltd.
CONSULTING ENGINEERS
#210-889 HARBOURSIDE DR., NORTH VANCOUVER, B.C. V7P 3S1
TEL.: (604) 990-4800 FAX: (604) 990-4805 www.dayton-knight.com

RESORT MUNICIPALITY OF WHISTLER
RAINBOW PARK PUMP STATION
REINFORCING – PLAN – SECTION

SCALE: AS SHOWN
DRAWING No. 179.5.1
SHEET No. S9 ISSUE C

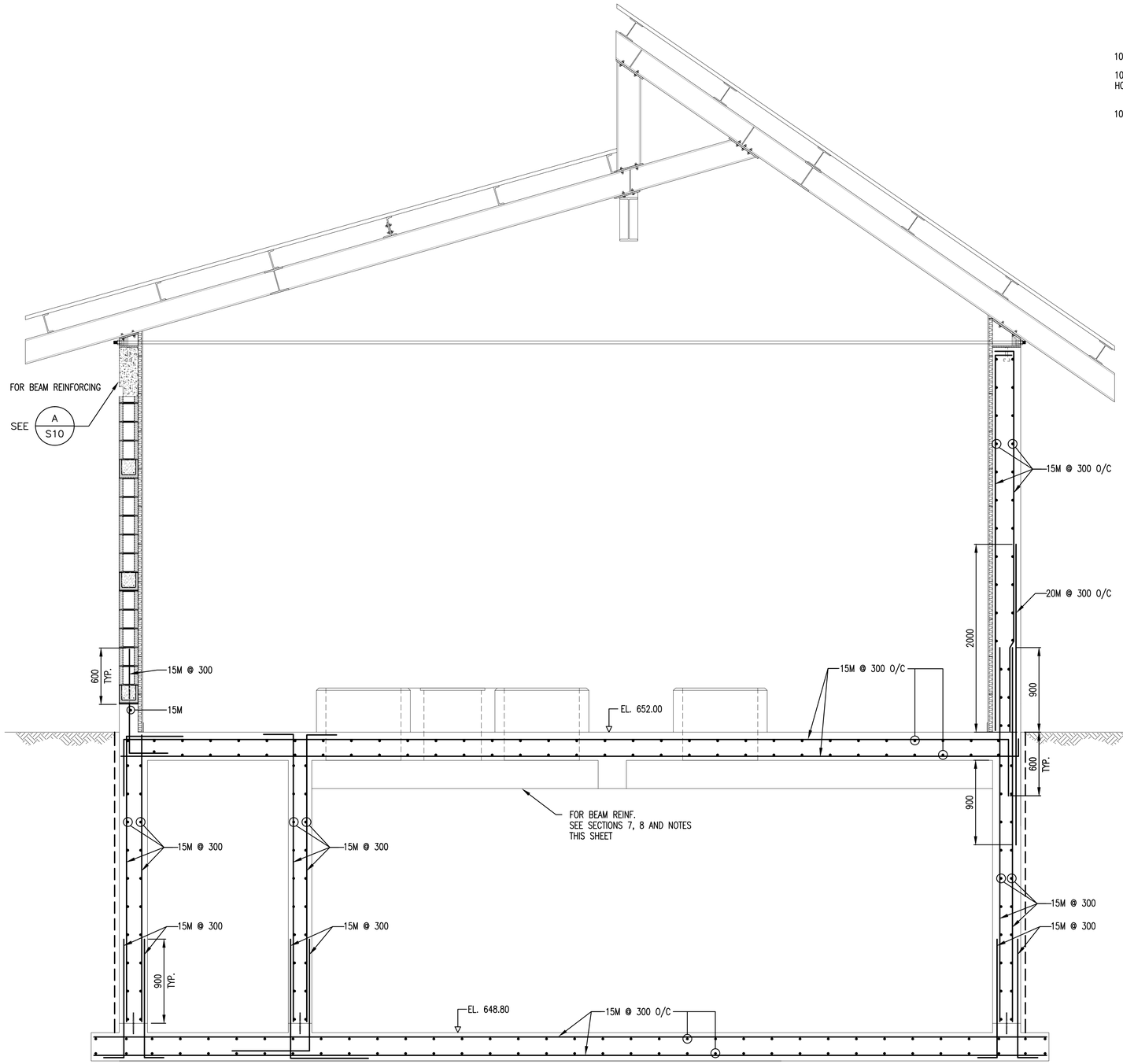

SECTION 2/S9
1:25

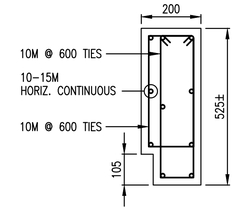

BEAM REINFORCING

DETAIL A/S10
1:10

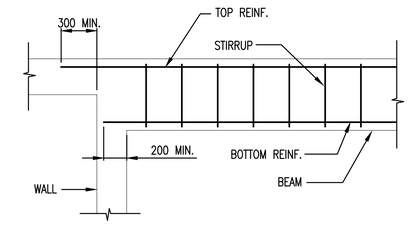

SECTION 6/S9
1:25

NOTES:

1. LIVE LOAD: 3.6 Kpa
2. BEAM: 250 WIDE x 600 DEEP
   REINF. WITH 3-15M BOTTOM &
   2-15M TOP
   10M @ 300 O/C STIRRUP
3. BEAM: 300 WIDE x 600 DEEP
   REINF. WITH 3-20M BOTTOM &
   3-15M TOP
   10M @ 300 O/C STIRRUP
4. ALL BOTTOM REINF. SHOULD SIT ON WALL OR BEAM SUPPORT MIN. 200mm
5. ALL TOP REINF. SHOULD SIT ON WALL OR BEAM SUPPORT AND EXTEND MIN. 300mm INTO CONCRETE SLAB

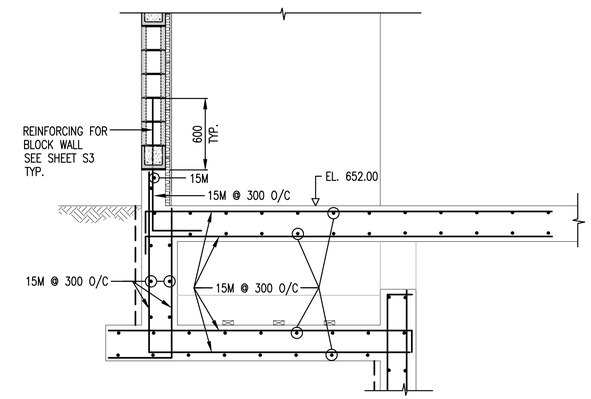

SECTION 3/S9
1:25

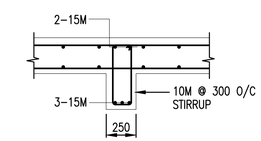

SECTION 5/S9
1:25

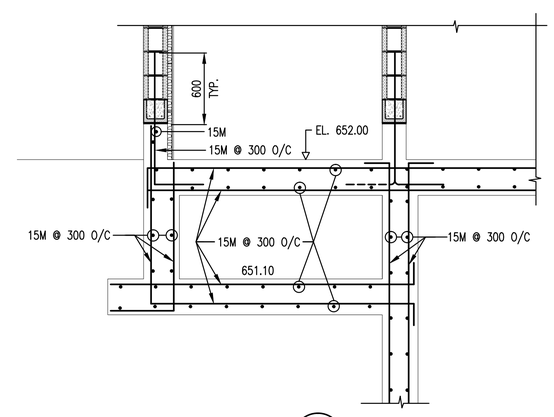

SECTION 4/S9
1:25

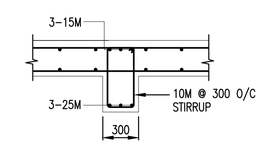

SECTION 7/S9
1:25

"These Record Drawings have been prepared based on information provided by the Contractor and others. Dayton & Knight Ltd. has not verified the accuracy or completeness of the information provided to them and does not warrant the accuracy or completeness of these Record Drawings. Users of these Record Drawings assume all risk of loss resulting from their use."

WHISTLER

PLOT: FULL 1:1 HALF 1:2

FILE: P:\Recdwgs\WHISTLER\179-75-1\STRUCTURAL\179-75-1 S10.dwg Tab S10 11-01-14 dchen

AutoCAD DRAWING

REVISIONS	ISSUE	DATE	DRAWN	CHK'D	APP'D	DESCRIPTION	ISSUE	DATE	DRAWN	CHK'D	APP'D	DESCRIPTION
	A	MAY12/08	KS	MR	MR	ISSUED FOR TENDER						
	B	JUL8/08	KS	MR	MR	B ISSUED FOR CONSTRUCTION						
	C	DEC15/09	AS	WB	WB	RECORD DRAWING						

DESIGNED MR
DRAWN KS
CHECKED MR

Dayton & Knight Ltd.
CONSULTING ENGINEERS
#210-889 HARBOURSIDE DR., NORTH VANCOUVER, B.C. V7P 3S1
TEL.: (604) 990-4800 FAX: (604) 990-4805 www.dayton-knight.com

RESORT MUNICIPALITY OF WHISTLER
RAINBOW PARK PUMP STATION
REINFORCING – SECTIONS

SCALE: AS SHOWN
DRAWING No. 179.5.1
SHEET No. S10 ISSUE C

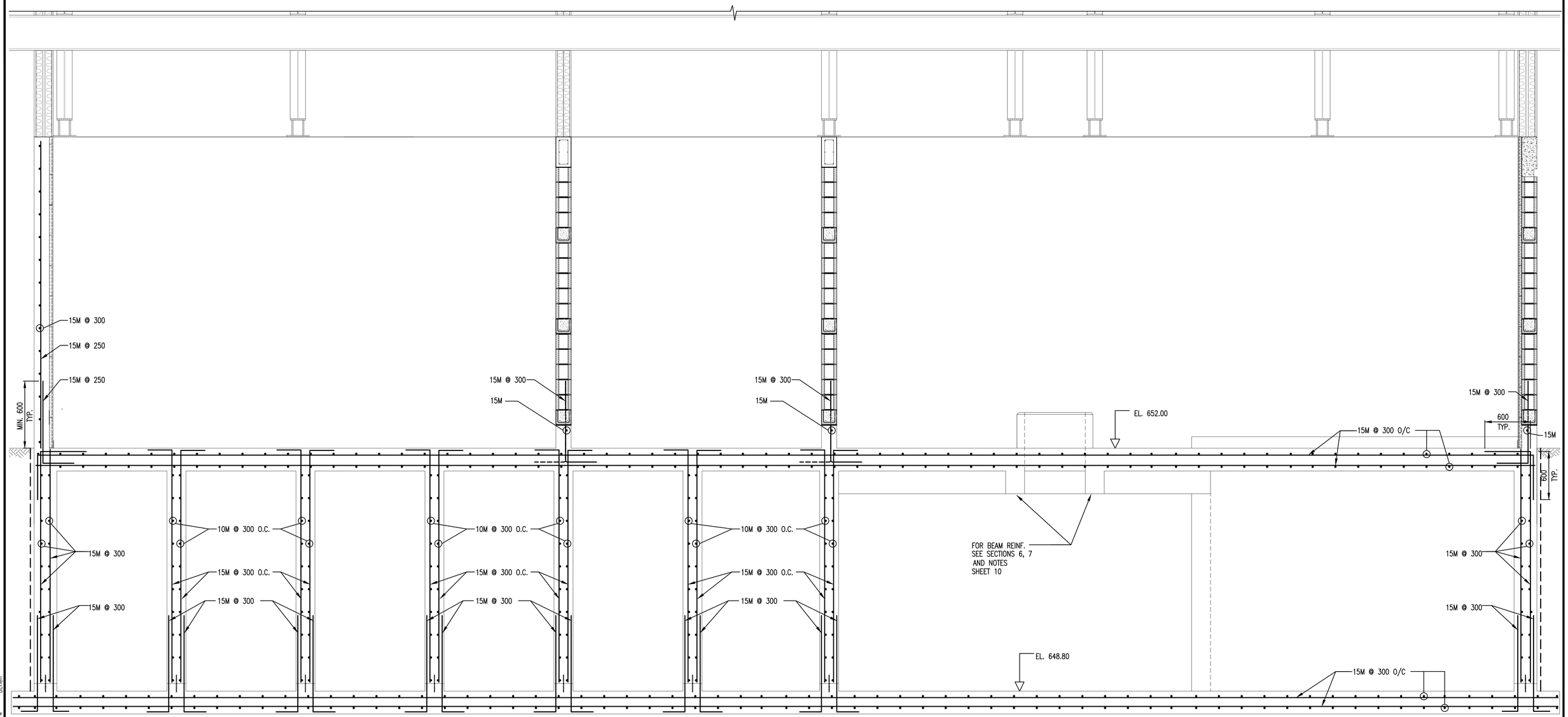

SECTION 1/S9
1:25

"These Record Drawings have been prepared based on information provided by the Contractor and others. Dayton & Knight Ltd. has not verified the accuracy or completeness of the information provided to them and does not warrant the accuracy or completeness of these Record Drawings. Users of these Record Drawings assume all risk of loss resulting from their use."

WHISTLER

PLOT: FULL 1:1 HALF 1:2

FILE: P:\Recdwgs\WHISTLER\179-75-1\STRUCTURAL\179-75-1 S11.dwg Tab S11 11-01-14 dchen

AutoCAD DRAWING

REVISIONS

ISSUE	DATE	DRAWN	CHK'D	APP'D	DESCRIPTION
A	MAY12/08	KS	MR	MR	ISSUED FOR TENDER
B	JUL8/08	KS	MR	MR	B ISSUED FOR CONSTRUCTION
C	DEC15/09	AS	WB	WB	RECORD DRAWING

ISSUE	DATE	DRAWN	CHK'D	APP'D	DESCRIPTION

DESIGNED MR
DRAWN KS
CHECKED MR

Dayton & Knight Ltd.
CONSULTING ENGINEERS
#210-889 HARBOURSIDE DR., NORTH VANCOUVER, B.C. V7P 3S1
TEL.: (604) 990-4800 FAX: (604) 990-4805 www.dayton-knight.com

RESORT MUNICIPALITY OF WHISTLER
RAINBOW PARK PUMP STATION
REINFORCING – SECTION

SCALE: AS SHOWN
DRAWING No. 179.5.1
SHEET No. S11 ISSUE C

"These Record Drawings have been prepared based on information provided by the Contractor and others. Dayton & Knight Ltd. has not verified the accuracy or completeness of the information provided to them and does not warrant the accuracy or completeness of these Record Drawings. Users of these Record Drawings assume all risk of loss resulting from their use."

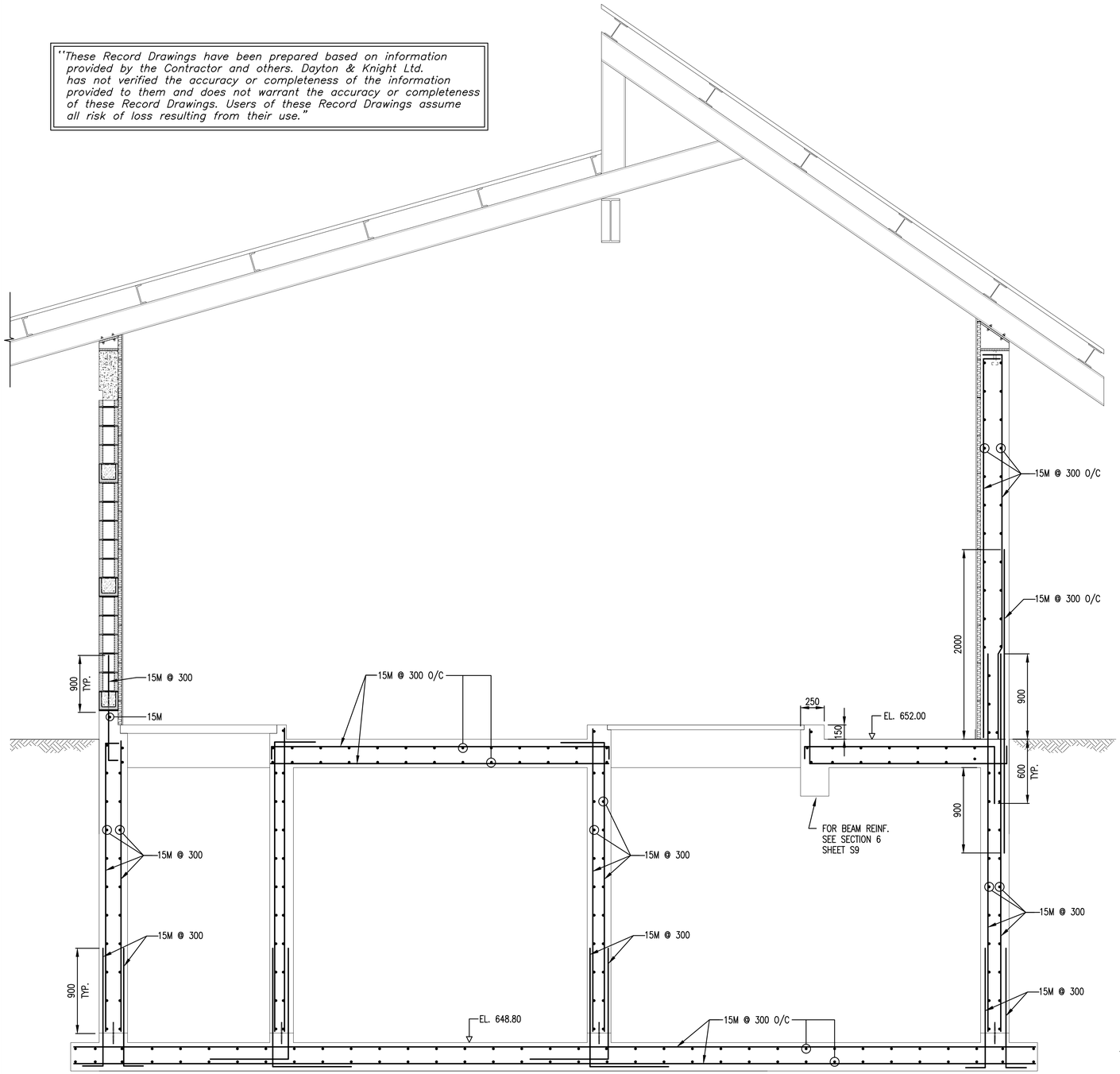

SECTION 2/S4 4/S5 8/S9
1:25

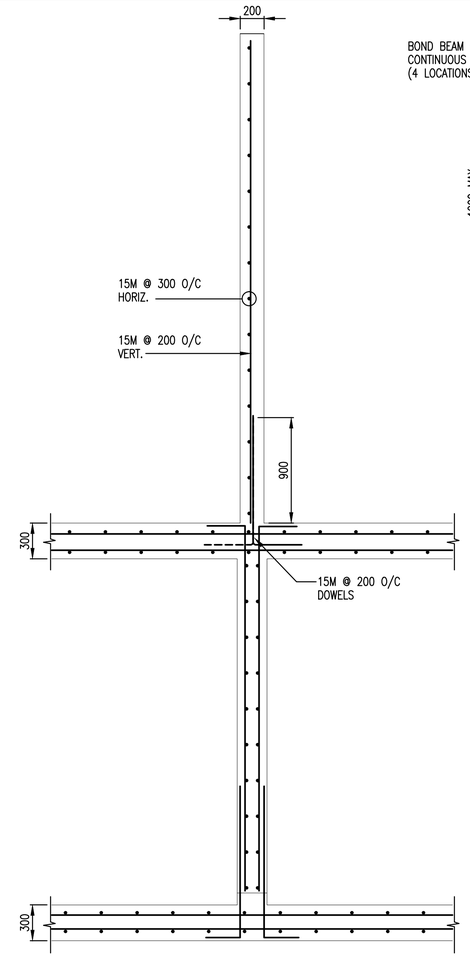

SECTION 9/S9
1:25

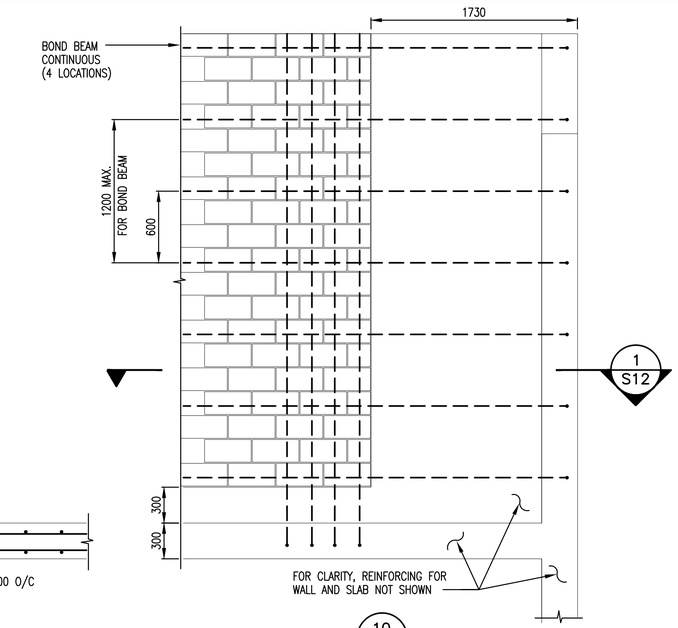

SECTION 10/S9
1:25

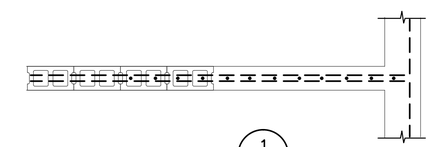

SECTION 1/S12
1:25

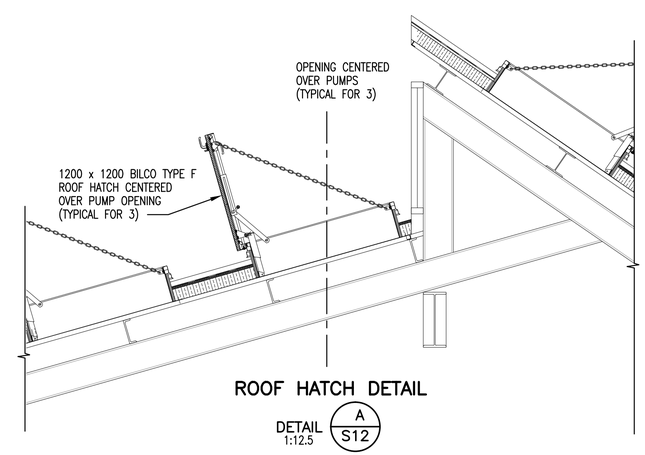

ROOF HATCH DETAIL

DETAIL A/S12
1:12.5

WHISTLER

PLOT: FULL 1:1 HALF 1:2

FILE: P:\Recdwgs\WHISTLER\179-75-1\STRUCTURAL\179-75-1 S12.dwg Tab S12 11-01-14 dchen

AutoCAD DRAWING

REVISIONS	ISSUE	DATE	DRAWN	CHK'D	APP'D	DESCRIPTION	ISSUE	DATE	DRAWN	CHK'D	APP'D	DESCRIPTION
	A	MAY12/08	KS	MR	MR	ISSUED FOR TENDER						
	B	JUN23/08	KS	MR	MR	B ISSUED FOR CONSTRUCTION						
	C	DEC15/09	AS	WB	WB	RECORD DRAWING						

DESIGNED MR
DRAWN KS
CHECKED MR

Dayton & Knight Ltd.
CONSULTING ENGINEERS
#210-889 HARBOURSIDE DR., NORTH VANCOUVER, B.C. V7P 3S1
TEL.: (604) 990-4800 FAX: (604) 990-4805 www.dayton-knight.com

RESORT MUNICIPALITY OF WHISTLER
RAINBOW PARK PUMP STATION
REINFORCING – SECTION

SCALE: AS SHOWN
DRAWING No. 179.5.1
SHEET No. S12 ISSUE C

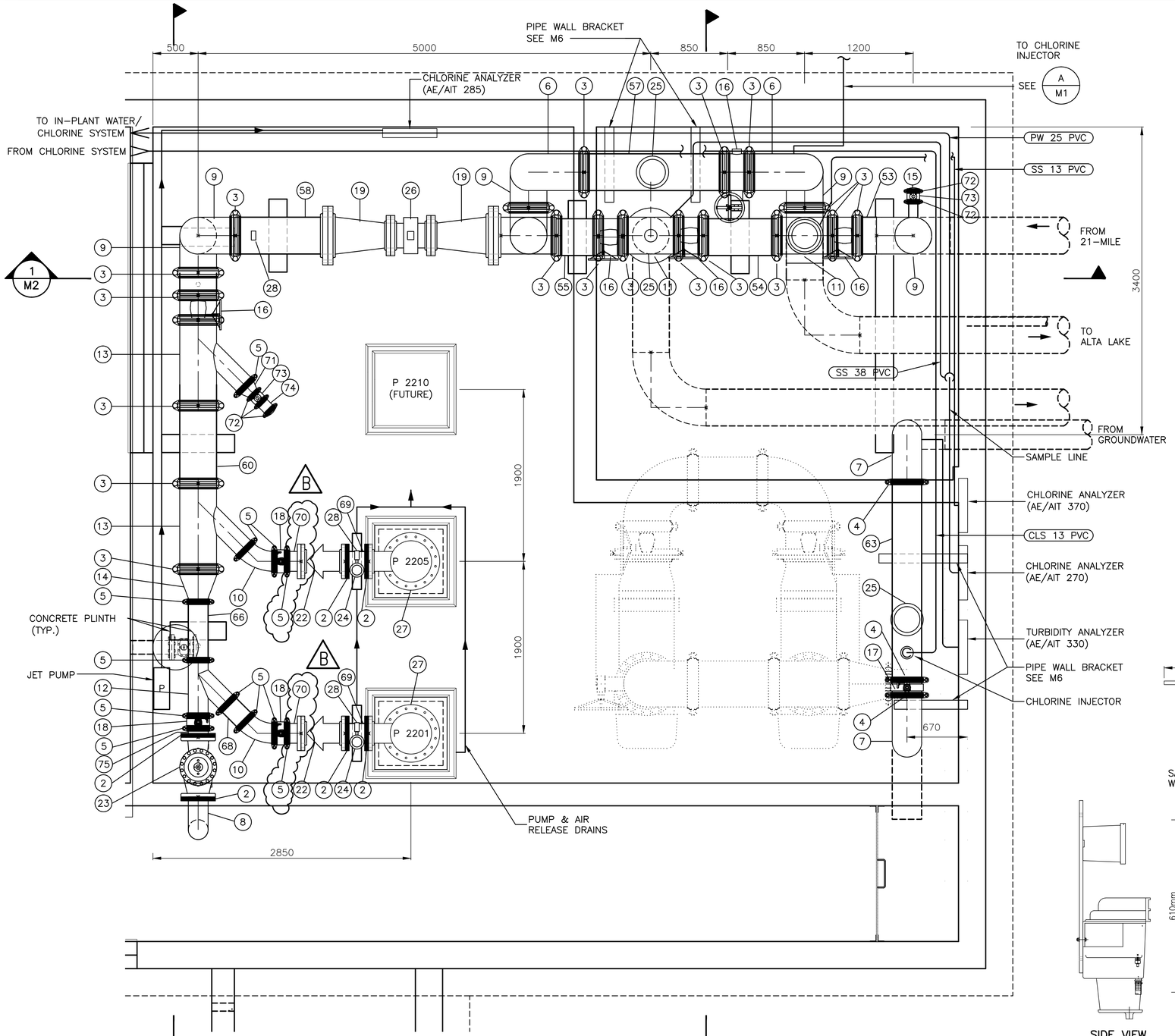

PLAN – PIPING LAYOUT
EL. 652.00

SCALE: 1:25

M3/2

M3/3

"These Record Drawings have been prepared based on information provided by the Contractor and others. Dayton & Knight Ltd. has not verified the accuracy or completeness of the information provided to them and does not warrant the accuracy or completeness of these Record Drawings. Users of these Record Drawings assume all risk of loss resulting from their use."

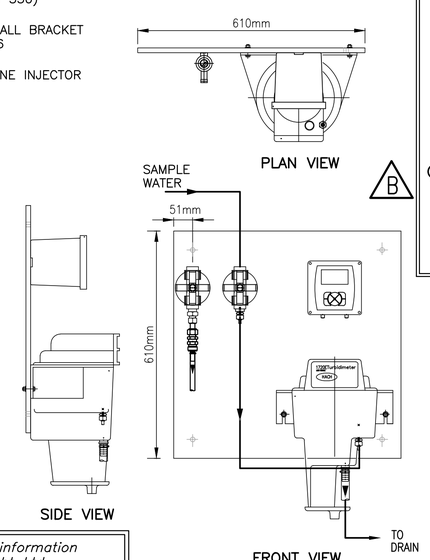

TYPICAL TURBIDITY PANEL LAYOUT

NTS

BILL OF MAJOR MATERIALS

ITEM	DESCRIPTION	QUANTITY
1	300 VIC. NO. 741 FLANGE ADAPTER	2
2	200 VIC. NO. 743 FLANGE ADAPTER	6
3	400 VIC. NO. W89 RIGID COUPLING	32
4	300 VIC. NO. 89 RIGID COUPLING	6
5	200 VIC. NO. 89 RIGID COUPLING	12
6	400 VIC. NO. W100 LONG RADIUS ELBOW	2
7	300 VIC. NO. 100 LONG RADIUS ELBOW	2
8	200 VIC. NO. 100 SHORT RADIUS ELBOW	1
9	400 VIC. NO. W10 SHORT RADIUS ELBOW	4
10	200 VIC. NO. 110 LONG RADIUS 45° ELBOW	2
11	400 VIC. NO. W20 TEE	4
12	200 VIC. NO. 30 45° LATERAL	1
13	400 x 400 x 200 VIC. NO. W30-R 45° REDUCING LATERAL	2
14	400 x 200 VIC. NO. W50 CONCENTRIC REDUCER	1
15	100 VIC. NO. 60 CAP	1
16	400 VIC. W706 BUTTERFLY VALVE	7
17	300 VIC-300 BUTTERFLY VALVE	2
18	200 VIC-300 BUTTERFLY VALVE	3
19	400 x 250 CONCENTRIC REDUCER, FE, 8" MAX. RED.	2
20	300 x 250 CONCENTRIC REDUCER, FE, 8" MAX. RED.	2
21	400 CHECK VALVE, TILTED DISC	1
22	200 CHECK VALVE, TILTED DISC	2
23	200 PRESSURE RELIEF VALVE	1
24	15 AUTO AIR RELEASE VALVE	2
25	50 COMBINATION AIR VALVE	3
26	250 FLOWMETER	3
27	200 HP DUTY PUMP	2
28	PRESSURE GAUGE/TRANSMITTER ASSEMBLY	3
29 TO 37	SPARES ITEMS NOT USED	2
38	CHLORINE STORAGE TANK	8
39	AIR BLOWER No. 1	1
40	AIR BLOWER No. 2	1
41	CHLORINE GENERATOR	1
42	BRINE TANK	1
43	CHLORINE PUMPS FOR SURFACE WATER	1
44	CHLORINE PUMPS FOR SURFACE WATER (FUTURE)	1
45	CHLORINE PUMPS FOR GROUND WATER	1
46	CHLORINE PUMPS FOR GROUND WATER (FUTURE)	1
47	EYEWASH	1
48	45 LITRE HOT WATER TANK	1
49	600 KW EMERGENCY GENERATOR (BY OTHERS)	1
50	400x400x250 VIC. No. 25 RED. TEE	1
51	250 VIC. No. 89 COUPLING	1
52	300 SHORT RADIUS ELBOW	1
53	400 SCH. 10S STAINLESS STEEL SPOOL, FL x GE, OAL AS REQUIRED	1
54	400 SCH. 10S STAINLESS STEEL SPOOL, GE x GE, OAL AS REQUIRED	1
55	400 SCH. 10S STAINLESS STEEL SPOOL, GE x GE, OAL AS REQUIRED	1
56	400 SCH. 10S STAINLESS STEEL SPOOL, GE x PE, OAL AS REQUIRED	1
57	400 SCH. 10S STAINLESS STEEL SPOOL, GE x GE, OAL AS REQUIRED	1
58	400 SCH. 10S STAINLESS STEEL SPOOL, FE x GE, OAL AS REQUIRED	1
59	400 SCH. 10S STAINLESS STEEL SPOOL, GE x GE, OAL AS REQUIRED	1
60	400 SCH. 10S STAINLESS STEEL SPOOL, GE x GE, OAL AS REQUIRED	1
61	400 SCH. 10S STAINLESS STEEL SPOOL, GE x GE, OAL AS REQUIRED	1
62	400 SCH. 10S STAINLESS STEEL SPOOL, GE x GE, OAL AS REQUIRED	1
63	300 SCH. 10S STAINLESS STEEL SPOOL, GE x GE, OAL AS REQUIRED	1
64	300 SCH. 10S STAINLESS STEEL SPOOL, GE x GE, OAL AS REQUIRED	1
65	300 SCH. 10S STAINLESS STEEL SPOOL, GE x PE, OAL AS REQUIRED	1
66	200 SCH. 10S STAINLESS STEEL SPOOL, GE x GE, OAL AS REQUIRED	1
67	200 SCH. 10S STAINLESS STEEL SPOOL, GE x PE, OAL AS REQUIRED	1
68	200 SCH. 10S STAINLESS STEEL SPOOL, GE x GE, OAL AS REQUIRED	1
69	200 SCH. 10S STAINLESS STEEL SPOOL, GE x GE, OAL AS REQUIRED	2
70	200 VIC. NO. 46 FLANGE ADAPTER NIPPLE	2
71	200 x 100 CONCENTRIC REDUCER, FE, 8" MAX. RED.	1
72	100 VIC. NO. 89 RIGID COUPLING	5
73	100 VIC-300 BUTTERFLY VALVE	2
74	MALE CAMLOCK	1
75	200 SCH. 10S STAINLESS STEEL SPOOL, GE x GE, OAL AS REQUIRED	1

WHISTLER

PLOT: FULL 1:1 HALF 1:2

FILE: P:\Recdwgs\WHISTLER\179-75-1\MECHANICAL\2nd-ISSUE FOR RECORD-20100125\179-75-1 M1_M3.dwg Tab M1-NO CHANGE 11-01-14 dchen

AutoCAD DRAWING

REVISIONS	ISSUE	DATE	DRAWN	CHK'D	APP'D	DESCRIPTION
	A	MAY12/08	KS	MM	MM	ISSUED FOR TENDER
	B	JUL8/08	KS	MM	MM	B ISSUED FOR CONSTRUCTION
	C	DEC16/09	AS	WB	WB	RECORD DRAWING

ISSUE	DATE	DRAWN	CHK'D	APP'D	DESCRIPTION

DESIGNED MM
DRAWN MM
CHECKED MM

Dayton & Knight Ltd.
CONSULTING ENGINEERS
#210-889 HARBOURSIDE DR., NORTH VANCOUVER, B.C. V7P 3S1
TEL.: (604) 990-4800 FAX: (604) 990-4805 www.dayton-knight.com

RESORT MUNICIPALITY OF WHISTLER
RAINBOW PARK PUMP STATION
MECHANICAL – PLAN – MECHANICAL ROOM

SCALE: 1:25
DRAWING No. 179.75.1
SHEET No. M1 ISSUE C

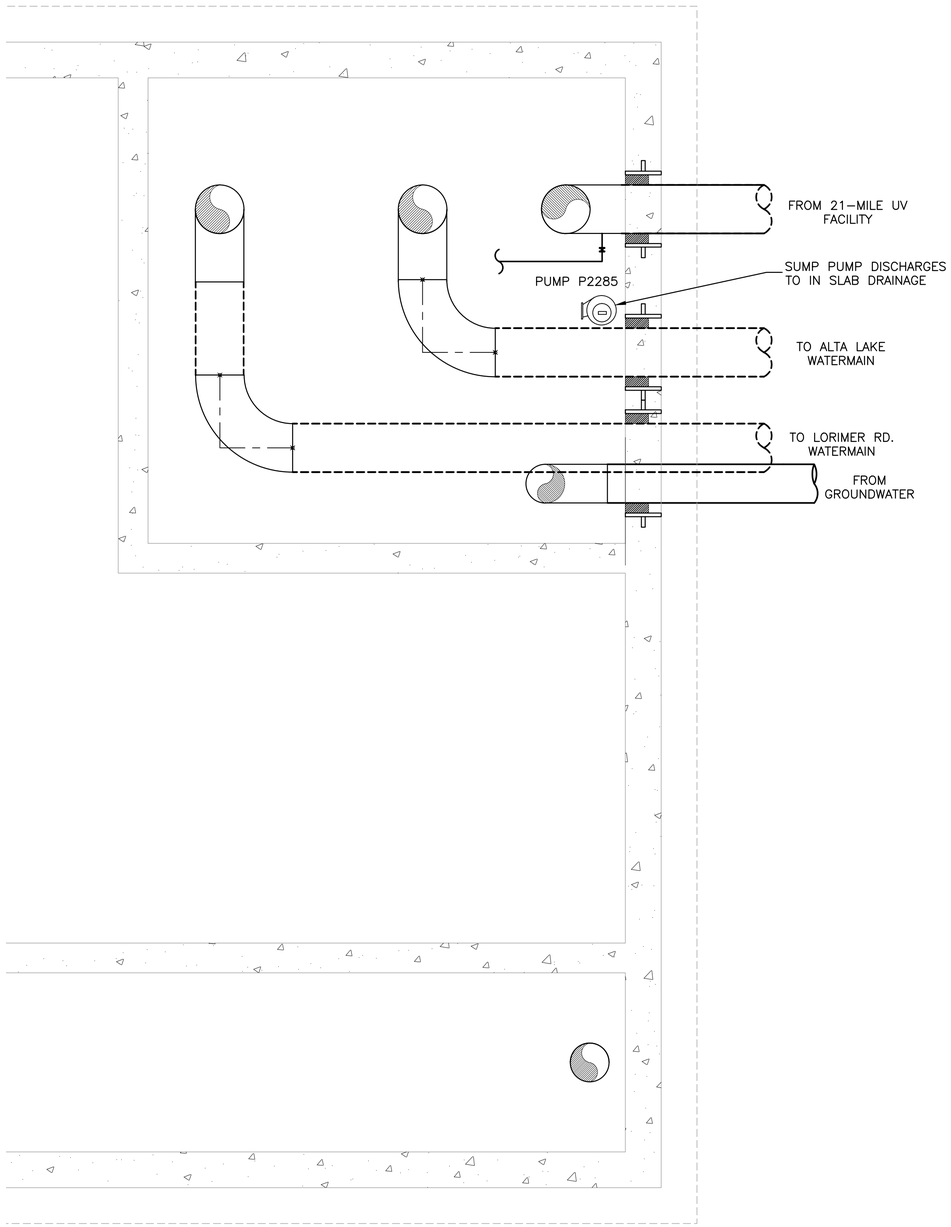

PLAN – PIPING LAYOUT @ EL. 648.80

SCALE: 1:25

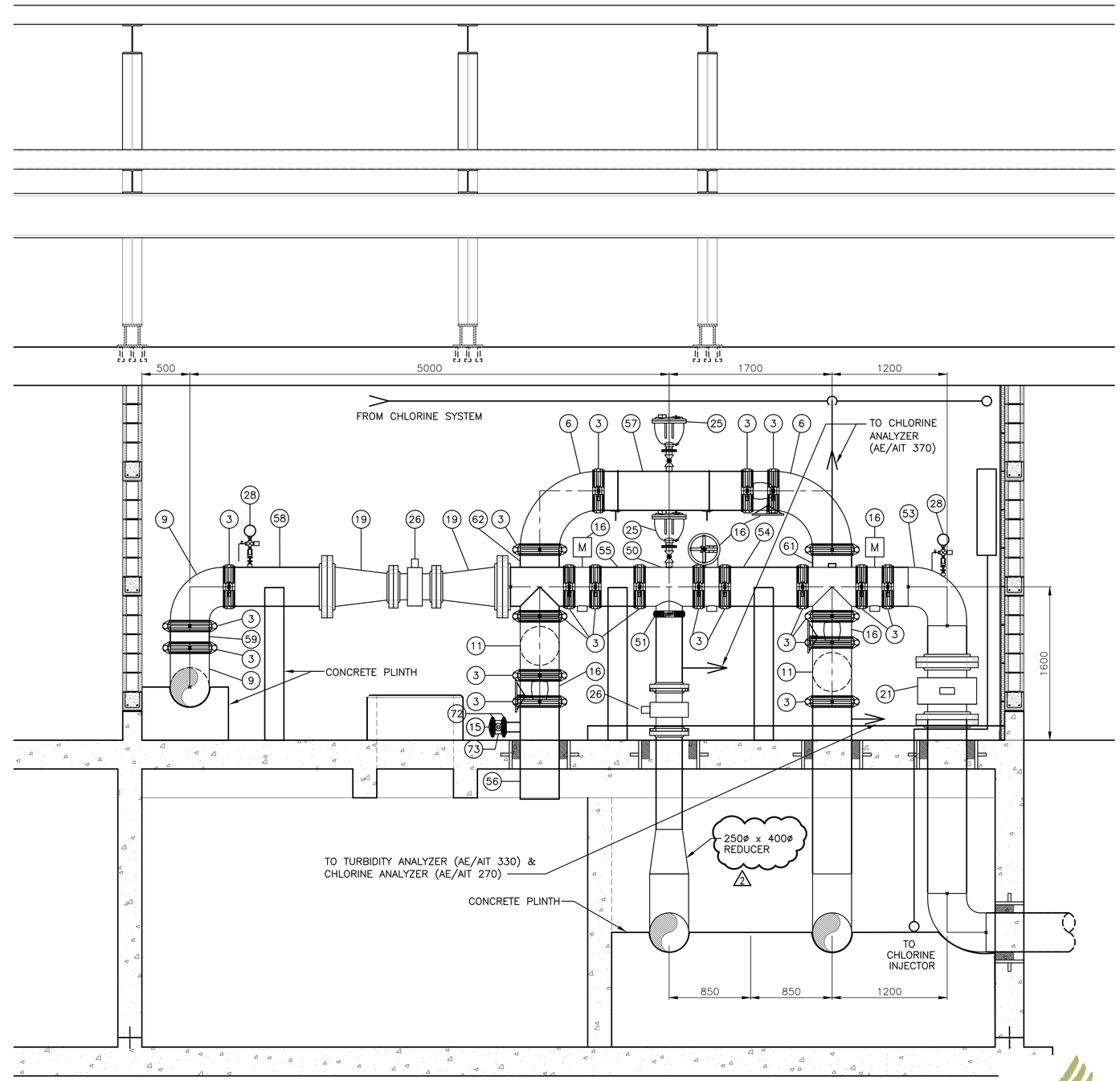

SECTION 1/M1
1:25

"These Record Drawings have been prepared based on information provided by the Contractor and others. Dayton & Knight Ltd. has not verified the accuracy or completeness of the information provided to them and does not warrant the accuracy or completeness of these Record Drawings. Users of these Record Drawings assume all risk of loss resulting from their use."

WHISTLER

PLOT: FULL 1:1 HALF 1:2

FILE: P:\Recdwgs\WHISTLER\179-75-1\MECHANICAL\2nd-ISSUE FOR RECORD-20100125\179-75-1 M2.dwg Tab M2 11-01-14 dchen

AutoCAD DRAWING

REVISIONS

ISSUE	DATE	DRAWN	CHK'D	APP'D	DESCRIPTION	ISSUE	DATE	DRAWN	CHK'D	APP'D	DESCRIPTION
A	MAY12/08	KS	MM	MM	ISSUED FOR TENDER	D	DEC16/09	AS	WB	WB	RECORD DRAWING
B	JUN03/08	KS	WB	WB	2 ADDENDUM No. 2						
C	JUL8/08	KS	MM	MM	ISSUED FOR CONSTRUCTION						

DESIGNED MM
DRAWN MM
CHECKED MM

Dayton & Knight Ltd.
CONSULTING ENGINEERS
#210-889 HARBOURSIDE DR., NORTH VANCOUVER, B.C. V7P 3S1
TEL.: (604) 990-4800 FAX: (604) 990-4805 www.dayton-knight.com

RESORT MUNICIPALITY OF WHISTLER
RAINBOW PARK PUMP STATION
MECHANICAL – SECTION

SCALE: AS SHOWN
DRAWING No. 179.75.1
SHEET No. M2 ISSUE D

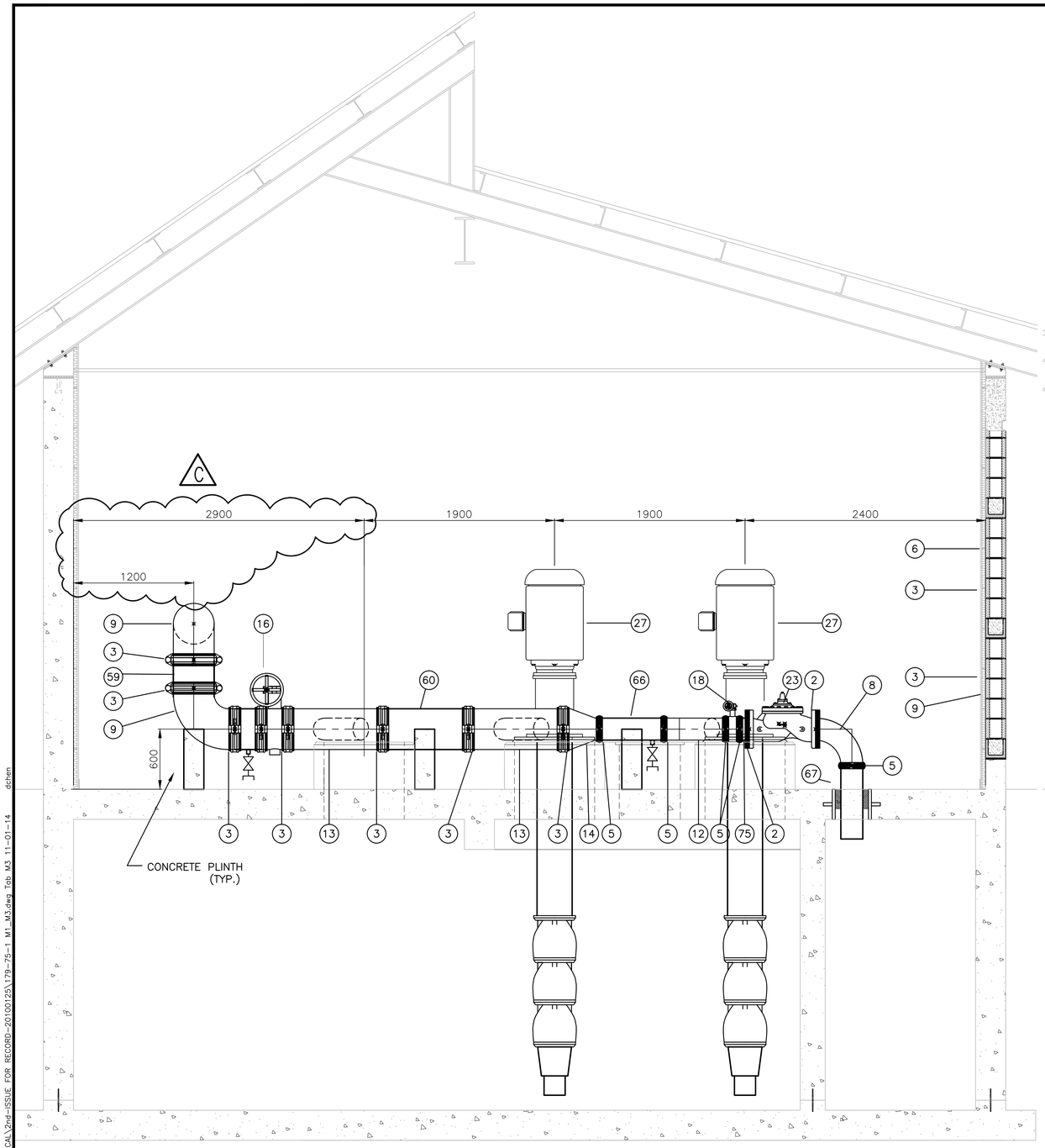

SECTION 2/M1
1:25

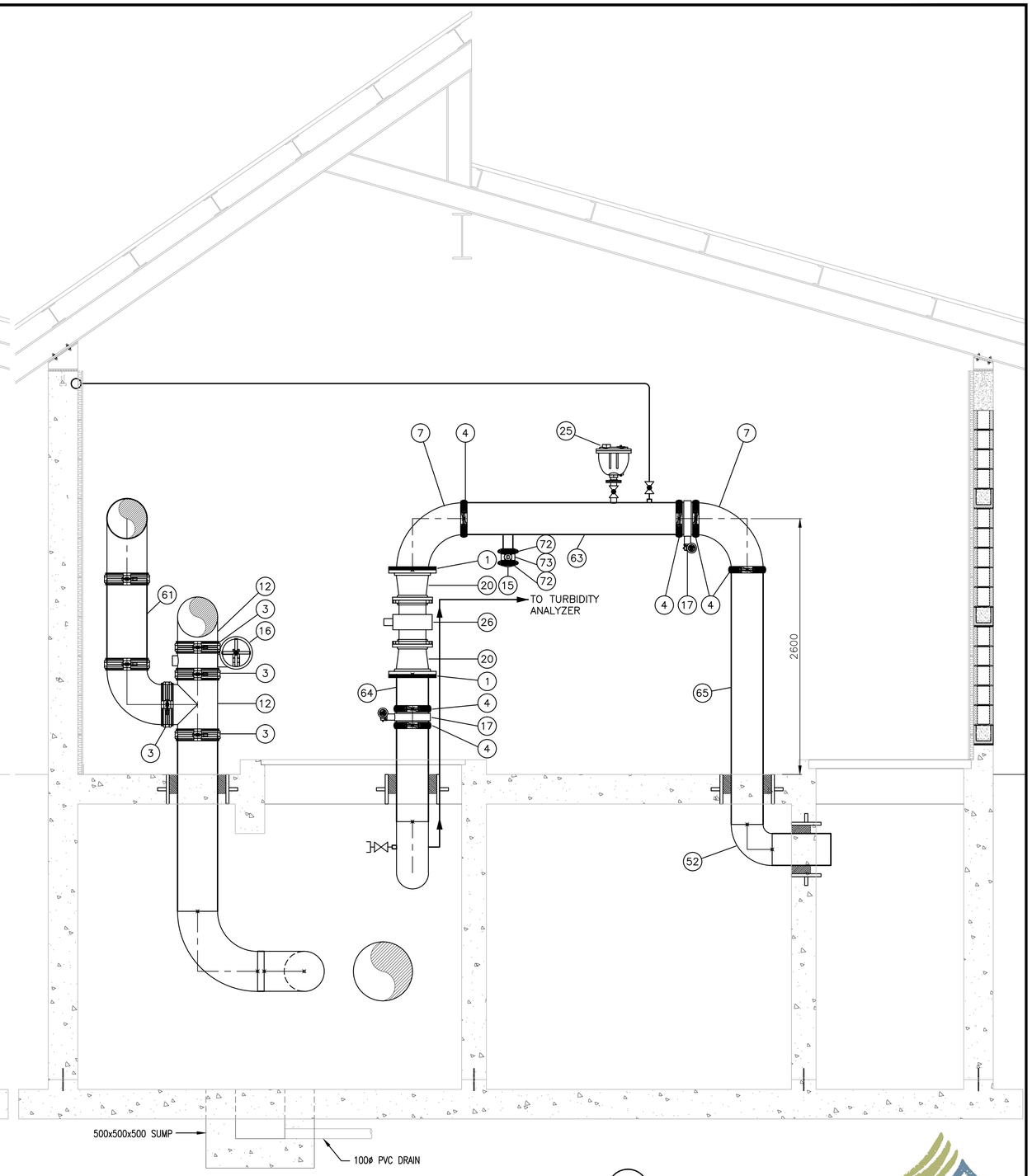

SECTION 3/M1
1:25

"These Record Drawings have been prepared based on information provided by the Contractor and others. Dayton & Knight Ltd. has not verified the accuracy or completeness of the information provided to them and does not warrant the accuracy or completeness of these Record Drawings. Users of these Record Drawings assume all risk of loss resulting from their use."

WHISTLER

PLOT: FULL 1:1 HALF 1:2

FILE: P:\Recdwgs\WHISTLER\179-75-1\MECHANICAL\2nd-ISSUE FOR RECORD-20100125\179-75-1 M1_M3.dwg Tab M3 11-01-14 dchen

AutoCAD DRAWING

REVISIONS

ISSUE	DATE	DRAWN	CHK'D	APP'D	DESCRIPTION	ISSUE	DATE	DRAWN	CHK'D	APP'D	DESCRIPTION
A	MAY12/08	KS	MM	MM	ISSUED FOR TENDER	D	DEC16/09	AS	WB	WB	RECORD DRAWING
B	JUL8/08	KS	MM	MM	ISSUED FOR CONSTRUCTION						
C	OCT8/08	KS	WB	WB	C DIMEMSIONS REVISED						

DESIGNED MM
DRAWN MM
CHECKED MM

Dayton & Knight Ltd.
CONSULTING ENGINEERS
#210-889 HARBOURSIDE DR., NORTH VANCOUVER, B.C. V7P 3S1
TEL.: (604) 990-4800 FAX: (604) 990-4805 www.dayton-knight.com

RESORT MUNICIPALITY OF WHISTLER
RAINBOW PARK PUMP STATION
MECHANICAL – SECTIONS

SCALE: AS SHOWN
DRAWING No. 179.75.1
SHEET No. M3 ISSUE D

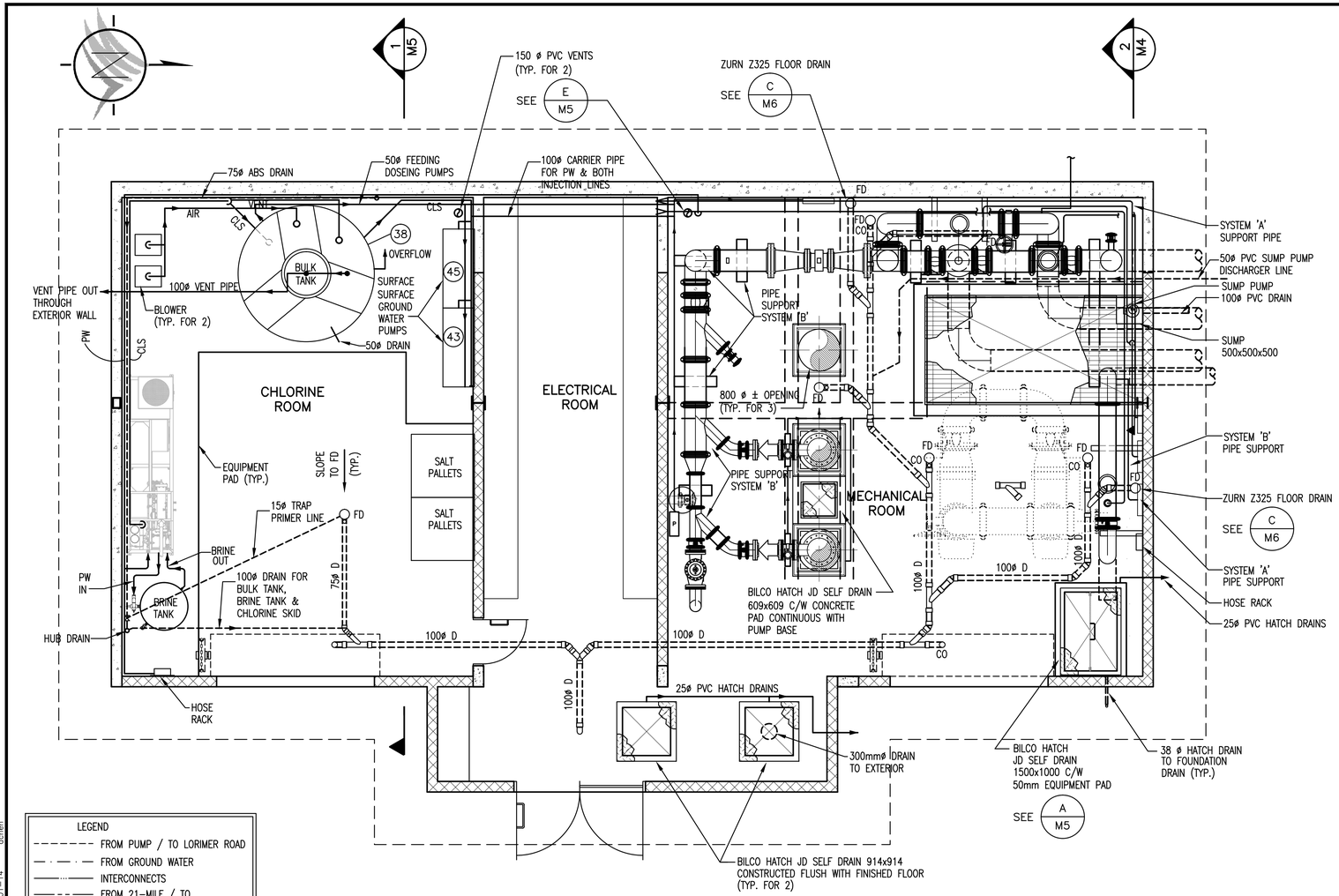

FLOOR PLAN AT EL. 652.00
1:50

LEGEND
- FROM PUMP / TO LORIMER ROAD
- FROM GROUND WATER
- INTERCONNECTS
- FROM 21-MILE / TO ALTA LAKE ROAD

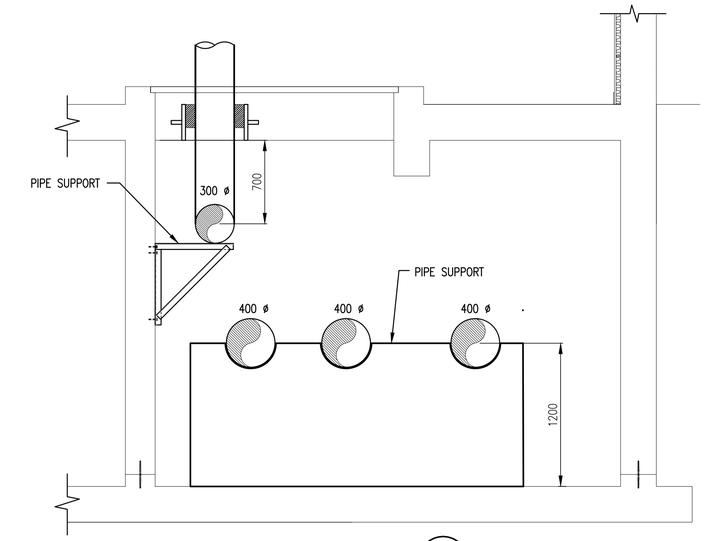

SECTION 2 M4
1:25

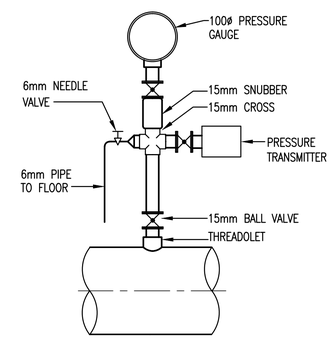

PRESSURE GAUGE AND PRESSURE TRANSMITTER CONNECTION

DETAIL A M4
NTS

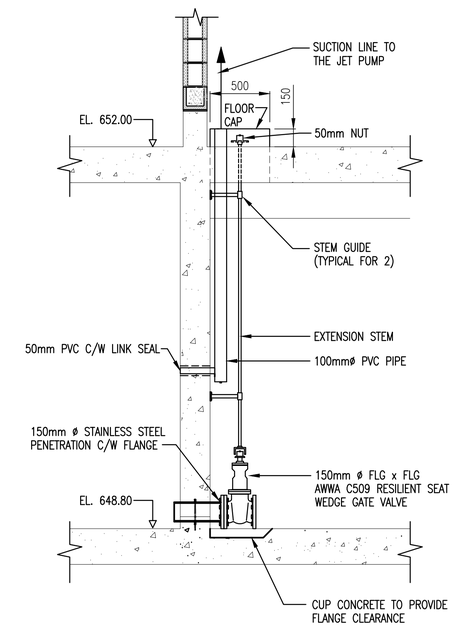

CONTACT TANK DRAIN VALVE

DETAIL B M4
1:25

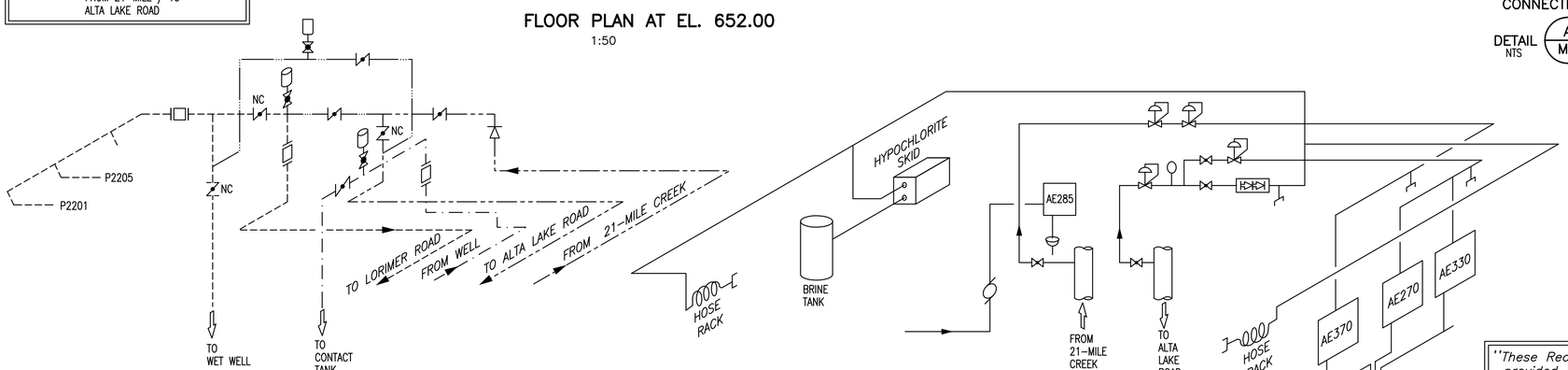

IN-PLANT WATER AND ANALYZERS SCHEMATIC
N.T.S.

"These Record Drawings have been prepared based on information provided by the Contractor and others. Dayton & Knight Ltd. has not verified the accuracy or completeness of the information provided to them and does not warrant the accuracy or completeness of these Record Drawings. Users of these Record Drawings assume all risk of loss resulting from their use."

WHISTLER

PLOT: FULL 1:1 HALF 1:2

FILE: P:\Recdwgs\WHISTLER\179-75-1\MECHANICAL\2nd-ISSUE FOR RECORD-20100125\179-75-1 M4.dwg Tab M4 11-01-14 dchen

AutoCAD DRAWING

REVISIONS	ISSUE	DATE	DRAWN	CHK'D	APP'D	DESCRIPTION	ISSUE	DATE	DRAWN	CHK'D	APP'D	DESCRIPTION
	A	APR25/08	KS	WB	WB	ISSUED FOR TENDER						
	B	JUL8/08	KS	WB	WB	ISSUED FOR CONSTRUCTION						
	C	DEC16/09	AS	WB	WB	RECORD DRAWING						

DESIGNED WB
DRAWN KS
CHECKED WB

Dayton & Knight Ltd.
CONSULTING ENGINEERS
#210-889 HARBOURSIDE DR., NORTH VANCOUVER, B.C. V7P 3S1
TEL.: (604) 990-4800 FAX: (604) 990-4805 www.dayton-knight.com

RESORT MUNICIPALITY OF WHISTLER
RAINBOW PARK PUMP STATION
MECHANICAL – PLAN – DETAILS

SCALE: AS SHOWN
DRAWING No. 179.75.1
SHEET No. M4 ISSUE C

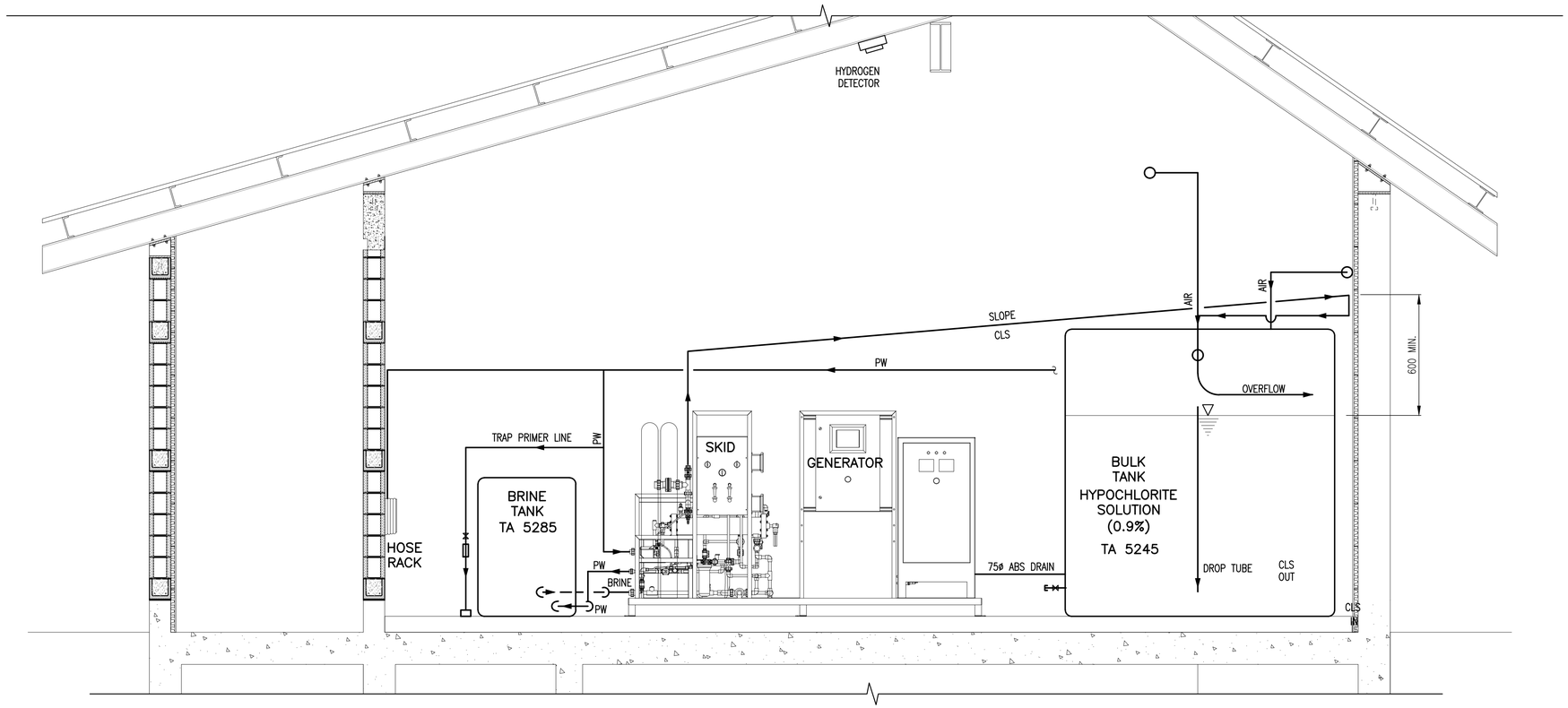

SECTION 1/M4
1:25

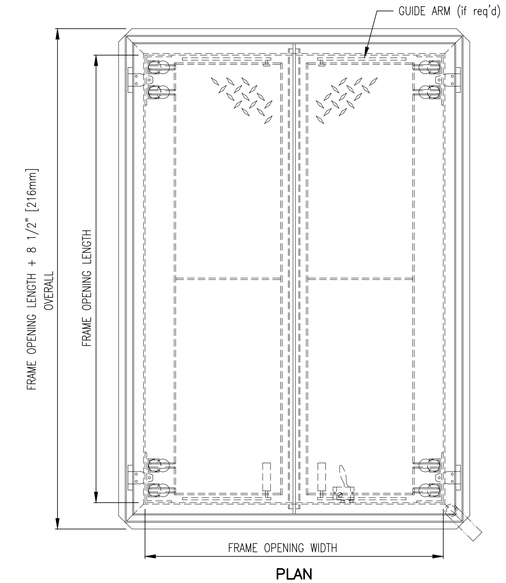

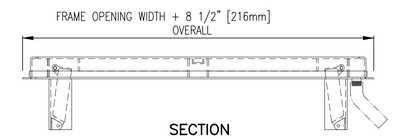

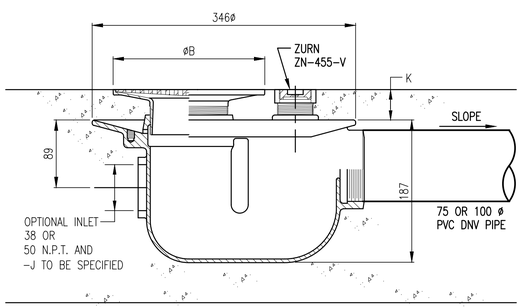

DETAIL C/M5
NTS

TYPICAL FLOOR DRAINS –FINISHED AREA
(EX. GENSET ROOM)

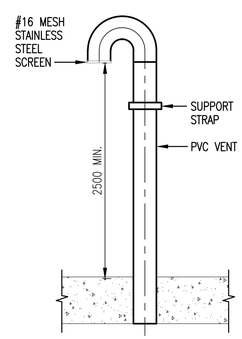

DETAIL B/M5
N.T.S.

TYPICAL TANK VENT PIPE

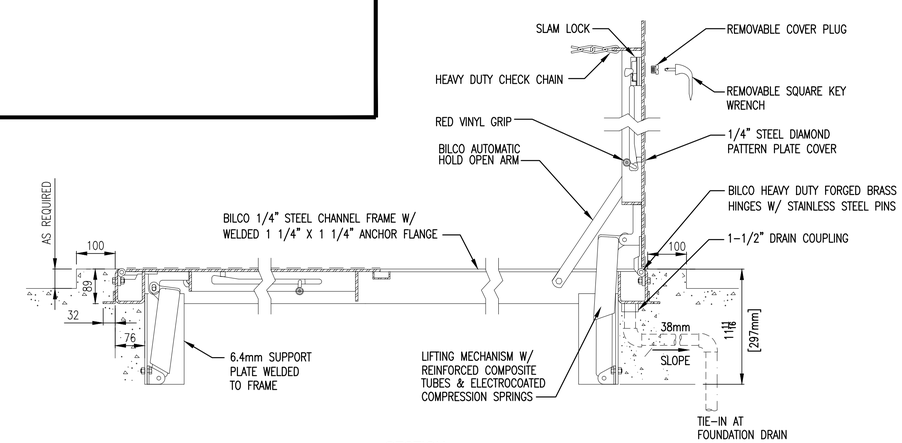

DETAIL A/M5
N.T.S.

BILCO HATCH JD SELF DRAIN
(OTHER HATCHES SIMILAR)

"These Record Drawings have been prepared based on information provided by the Contractor and others. Dayton & Knight Ltd. has not verified the accuracy or completeness of the information provided to them and does not warrant the accuracy or completeness of these Record Drawings. Users of these Record Drawings assume all risk of loss resulting from their use."

WHISTLER

PLOT: FULL 1:50 HALF 1:100

FILE: P:\Recdwgs\WHISTLER\179-75-1\MECHANICAL\2nd-ISSUE FOR RECORD-20100125\179-75-1 M5.dwg Tab M5 11-01-14 dchen

AutoCAD DRAWING

REVISIONS	ISSUE	DATE	DRAWN	CHK'D	APP'D	DESCRIPTION	ISSUE	DATE	DRAWN	CHK'D	APP'D	DESCRIPTION
	A	MAY12/08	KS	WB	WB	ISSUED FOR TENDER						
	B	JUL8/08	KS	WB	WB	ISSUED FOR CONSTRUCTION						
	C	DEC16/09	AS	WB	WB	RECORD DRAWING						

DESIGNED WB
DRAWN KS
CHECKED WB

Dayton & Knight Ltd.
CONSULTING ENGINEERS
#210-889 HARBOURSIDE DR., NORTH VANCOUVER, B.C. V7P 3S1
TEL.: (604) 990-4800 FAX: (604) 990-4805 www.dayton-knight.com

RESORT MUNICIPALITY OF WHISTLER
RAINBOW PARK PUMP STATION
MECHANICAL – SECTION – DETAILS

SCALE: AS SHOWN
DRAWING No. 179.75.1
SHEET No. M5 ISSUE C

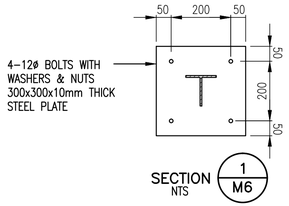

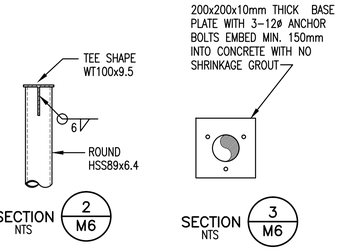

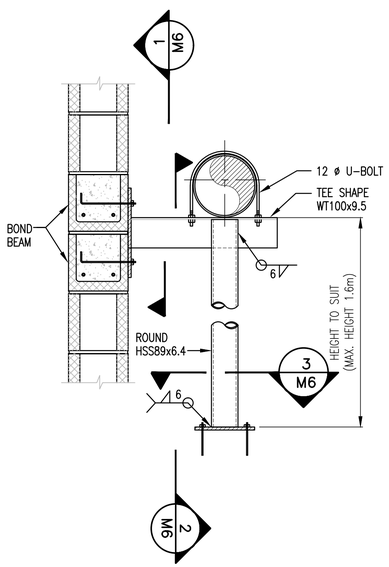

SINGLE PIPE WALL BRACKET

SYSTEM "A"

SCHEDULE – PIPE HANGER ROD AND SPACING OF ROD/BRACKET			
PIPE SIZE MILLIMETRES	ROD SIZE MILLIMETRES	MAXIMUM SPACING – METRES	
		STEEL PIPE	COPPER TUBING AND PVC
200 & 300	22	3	–
350 & LARGER	25	3	–

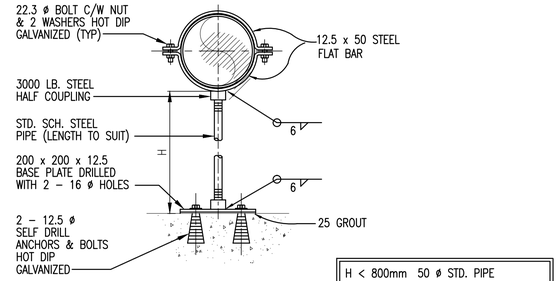

H < 800mm 50 ø STD. PIPE
H = 800 TO 1600mm 75 ø STD. PIPE

PIPE SUPPORT DETAILS (PIPE ELEVATED)
SYSTEM "B"

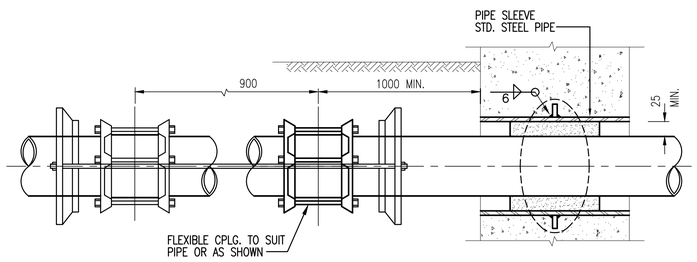

SYSTEM "C"

TYPICAL PIPE SUPPORT DETAILS

NTS

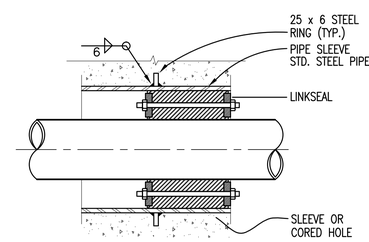

SYSTEM "D"

AT ALL CONCRETE PENETRATIONS

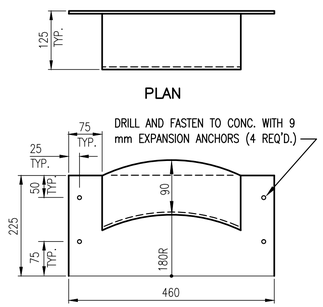

WALL MOUNTED HOSE RACK

NOTE:
ALL HOSE RACKS SHALL BE WELDED CONSTRUCTION FROM 6 mm PLATE, GALV'D. AFTER FABRICATION. ALL BOLTS AND NUTS SHALL BE GALV'D.

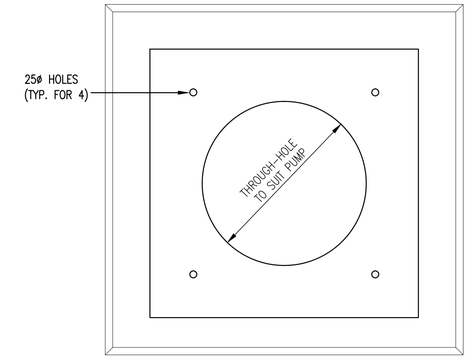

PLAN

NOTE:
DIMENSIONS TO BE CONFIRMED FOLLOWING PUMP SELECTION

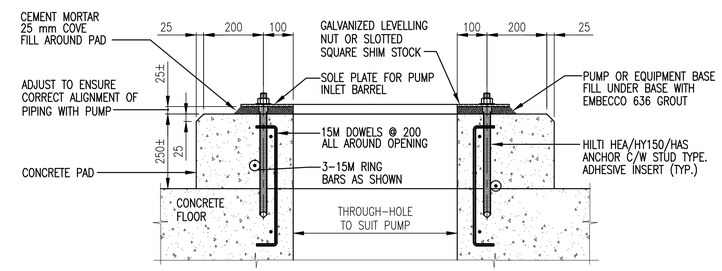

SECTION

DETAIL A M6
N.T.S.

TYPICAL FOUNDATION FOR PUMPS ON NEW CONCRETE FLOORS

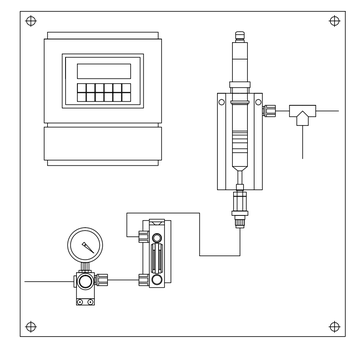

TYPICAL CHLORINE PANEL

NTS

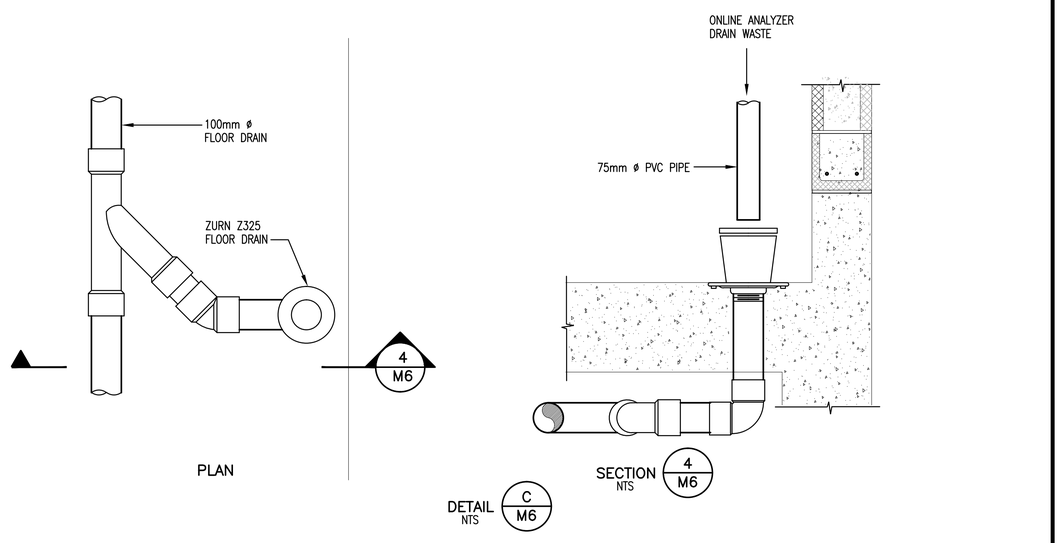

"These Record Drawings have been prepared based on information provided by the Contractor and others. Dayton & Knight Ltd. has not verified the accuracy or completeness of the information provided to them and does not warrant the accuracy or completeness of these Record Drawings. Users of these Record Drawings assume all risk of loss resulting from their use."

WHISTLER

PLOT: FULL 1:50 HALF 1:100

FILE: P:\Recdwgs\WHISTLER\179-75-1\MECHANICAL\2nd-ISSUE FOR RECORD-20100125\179-75-1 M6.dwg Tab M6 11-01-14 dchen

AutoCAD DRAWING

REVISIONS	ISSUE	DATE	DRAWN	CHK'D	APP'D	DESCRIPTION	ISSUE	DATE	DRAWN	CHK'D	APP'D	DESCRIPTION
	A	MAY12/08	KS	WB	WB	ISSUED FOR TENDER						
	B	JUL8/08	KS	WB	WB	ISSUED FOR CONSTRUCTION						
	C	DEC17/09	AS	WB	WB	RECORD DRAWING						

DESIGNED WB
DRAWN KS
CHECKED WB

Dayton & Knight Ltd.
CONSULTING ENGINEERS
#210-889 HARBOURSIDE DR., NORTH VANCOUVER, B.C. V7P 3S1
TEL.: (604) 990-4800 FAX: (604) 990-4805 www.dayton-knight.com

RESORT MUNICIPALITY OF WHISTLER
RAINBOW PARK PUMP STATION
MECHANICAL – DETAILS

SCALE: AS SHOWN
DRAWING No. 179.75.1
SHEET No. M6 ISSUE C

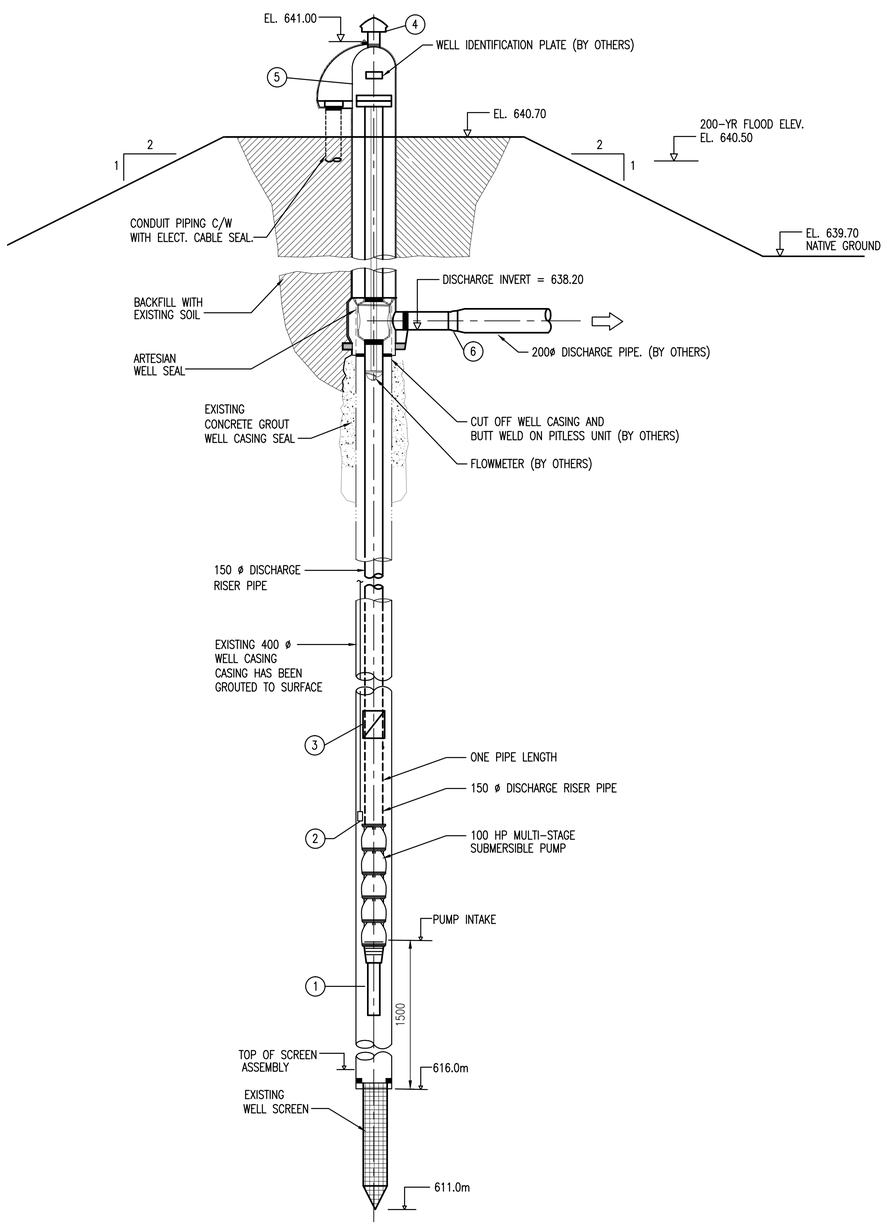

SECTION

400 ø WATER WELL

BILL OF MAJOR MATERIALS FOR WATER WELL	
ITEM	DESCRIPTION
1	SUBMERSIBLE WELL PUMP AND RISER PIPE
2	WELL LEVEL INDICATOR (PRESSURE TRANSMITTER)
3	150 POPPET TYPE CHECK VALVE
4	VENT (BY OTHERS)
5	PITLESS UNIT FOR 400 WELL (BY OTHERS)
6	1 – 150 MNPT x 200 (150#) FLG FAB CONCENTRIC INCREASER (BY OTHERS)

"These Record Drawings have been prepared based on information provided by the Contractor and others. Dayton & Knight Ltd. has not verified the accuracy or completeness of the information provided to them and does not warrant the accuracy or completeness of these Record Drawings. Users of these Record Drawings assume all risk of loss resulting from their use."

WHISTLER

PLOT: FULL 1:50 HALF 1:100

FILE: P:\Recdwgs\WHISTLER\179-75-1\MECHANICAL\2nd-ISSUE FOR RECORD-20100125\179-75-1 M7.dwg Tab M7 11-01-14 dchen

AutoCAD DRAWING

REVISIONS	ISSUE	DATE	DRAWN	CHK'D	APP'D	DESCRIPTION	ISSUE	DATE	DRAWN	CHK'D	APP'D	DESCRIPTION
	A	MAY12/08	KS	WB	WB	ISSUED FOR TENDER						
	B	JUL8/08	KS	WB	WB	ISSUED FOR CONSTRUCTION						
	C	DEC17/09	AS	WB	WB	RECORD DRAWING						

DESIGNED WB
DRAWN KS
CHECKED WB

Dayton & Knight Ltd.
CONSULTING ENGINEERS
#210-889 HARBOURSIDE DR., NORTH VANCOUVER, B.C. V7P 3S1
TEL.: (604) 990-4800 FAX: (604) 990-4805 www.dayton-knight.com

RESORT MUNICIPALITY OF WHISTLER
RAINBOW PARK PUMP STATION
WATER WELL DETAILS

SCALE: AS SHOWN
DRAWING No. 179.75.1
SHEET No. M7 ISSUE C

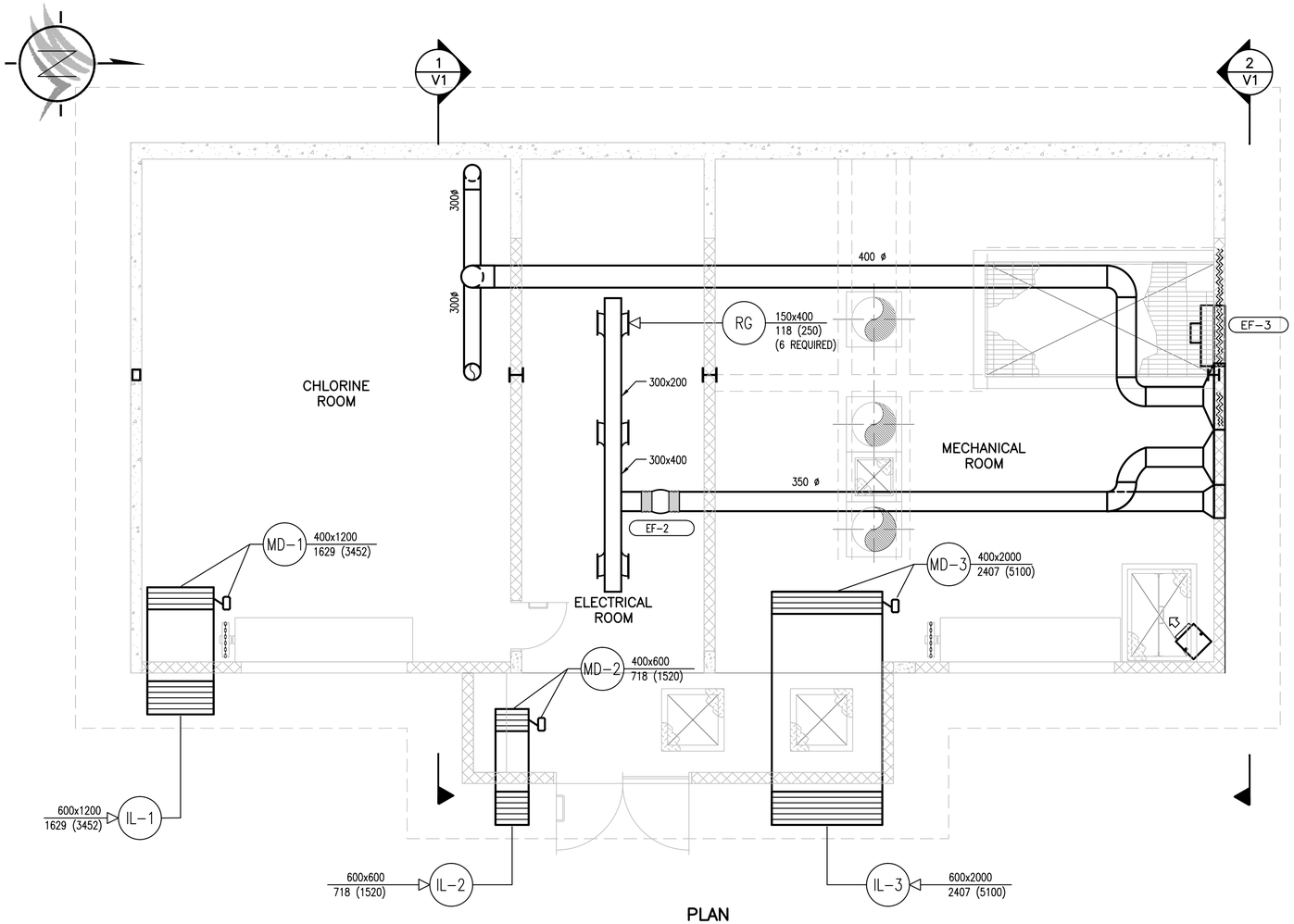

PLAN
1:50

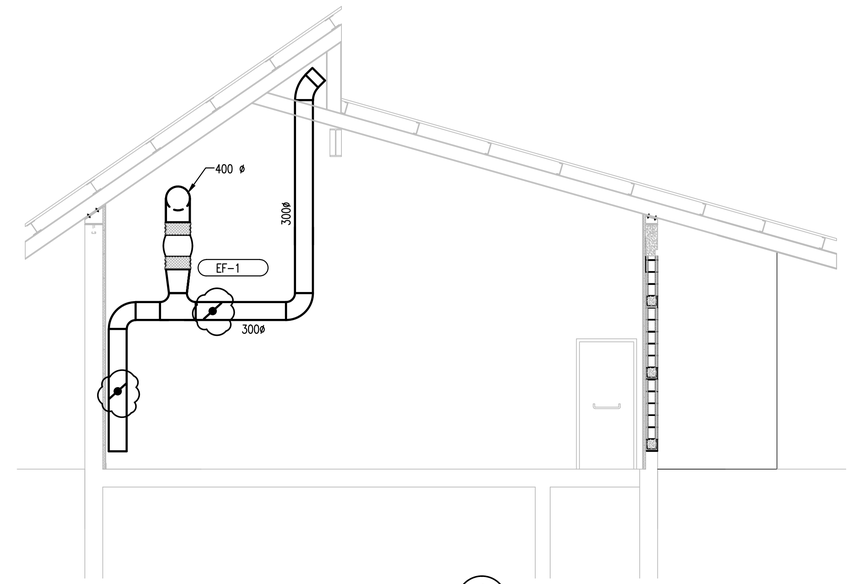

SECTION 1/V1
1:50

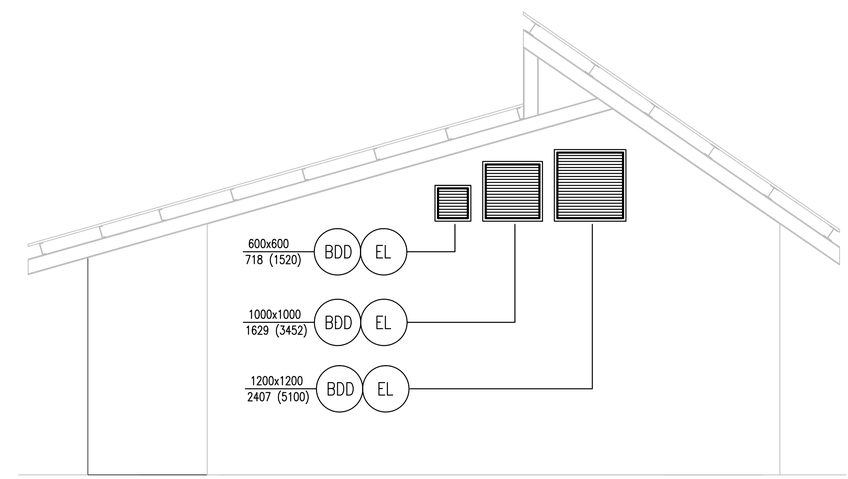

SECTION 2/V1
1:50

"These Record Drawings have been prepared based on information provided by the Contractor and others. Dayton & Knight Ltd. has not verified the accuracy or completeness of the information provided to them and does not warrant the accuracy or completeness of these Record Drawings. Users of these Record Drawings assume all risk of loss resulting from their use."

WHISTLER

PLOT: FULL 1:1 HALF 1:2

FILE: P:\Recdwgs\WHISTLER\179-75-1\HEATING & VENTILATING\179-75-1 HV1.dwg Tab V1 11-01-14 dchen

AutoCAD DRAWING

REVISIONS

ISSUE	DATE	DRAWN	CHK'D	APP'D	DESCRIPTION	ISSUE	DATE	DRAWN	CHK'D	APP'D	DESCRIPTION
A	MAY12/08	KS	EP	EP	ISSUED FOR TENDER						
B	JUL8/08	KS	EP	EP	ISSUED FOR CONSTRUCTION						
C	DEC16/09	AS	WB	WB	RECORD DRAWING						

DESIGNED EP
DRAWN KS
CHECKED EP

Dayton & Knight Ltd.
CONSULTING ENGINEERS
#210-889 HARBOURSIDE DR., NORTH VANCOUVER, B.C. V7P 3S1
TEL.: (604) 990-4800 FAX: (604) 990-4805 www.dayton-knight.com

RESORT MUNICIPALITY OF WHISTLER
RAINBOW PARK PUMP STATION
HEATING AND VENTILATION – PLAN

SCALE: AS SHOWN
DRAWING No. 179.75.1
SHEET No. V1 ISSUE C

LEGEND

- FIXED LOUVRE
- LOUVRE C/W MOTORIZED DAMPER
- AUTOMATIC GRAVITY BACK DRAFT DAMPER
- VOLUME DAMPER (ROUND DUCT, RECTANGULAR DUCT)
- ROOF MOUNTED FAN (EL./PLAN)
- RETURN DUCT
- SUPPLY DUCT
- 90 ° ELBOW IN DUCT (WITH VANES)
- 90 ° ELBOW IN DUCT (WITHOUT VANES)
- MITRE TEE WITH VANES
- SUPPLY GRILL (SIZE, CAPACITY)
- RETURN GRILL (SIZE CAPACITY)
- CANVAS CONNECTION
- EL W x H / L/S (CFM) — EXHAUST LOUVRE
- IL W x H / L/S (CFM) — INLET LOUVRE
- RG W x H / L/S (CFM) — RETURN GRILLE
- SG W x H / L/S (CFM) — SUPPLY GRILLE
- BDD — BACK DRAFT DAMPER
- EF — EXHAUST FAN
- EG — EXHAUST GRILLE
- MD — MOTORIZED DAMPER
- SG — SUPPLY GRILLE

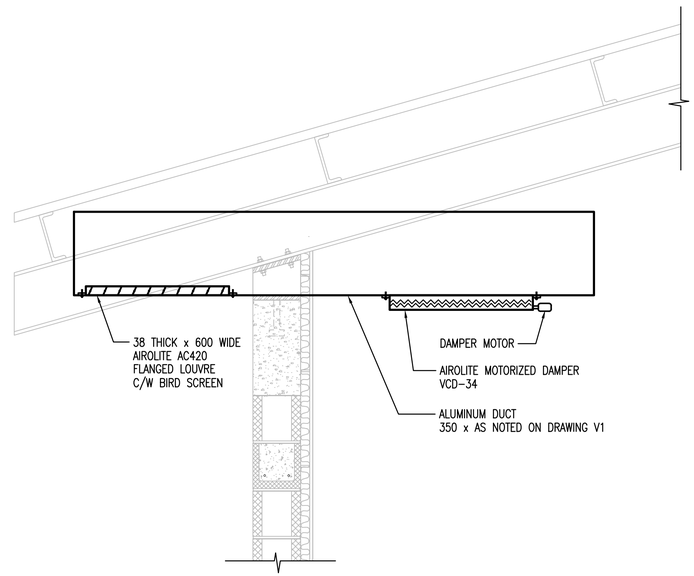

TYPICAL AIR INLET

DETAIL A/V2
NTS

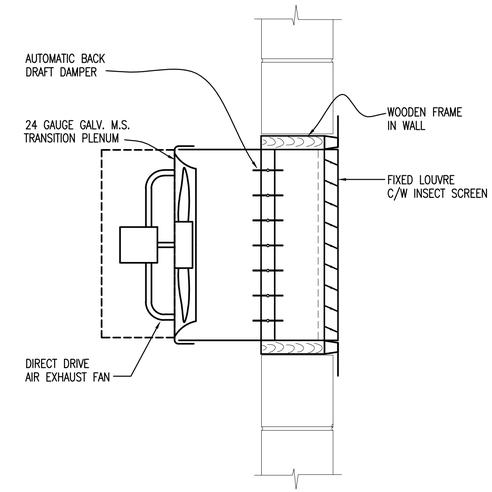

TYPICAL AIR EXHAUST FAN AND OUTLET

NTS

DETAIL B/V2
NTS

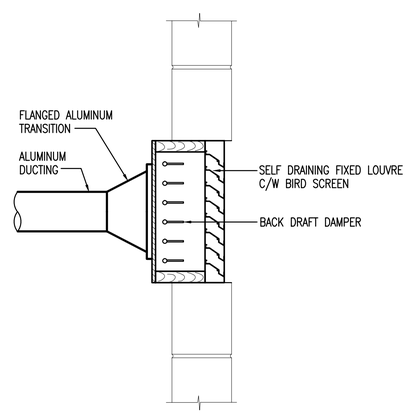

EXHAUST FAN

DETAIL C/V2

"These Record Drawings have been prepared based on information provided by the Contractor and others. Dayton & Knight Ltd. has not verified the accuracy or completeness of the information provided to them and does not warrant the accuracy or completeness of these Record Drawings. Users of these Record Drawings assume all risk of loss resulting from their use."

WHISTLER

PLOT: FULL 1:1 HALF 1:2

FILE: P:\Recdwgs\WHISTLER\179-75-1\HEATING & VENTILATING\179-75-1 HV2.dwg Tab Model 11-01-14 dchen

AutoCAD DRAWING

REVISIONS	ISSUE	DATE	DRAWN	CHK'D	APP'D	DESCRIPTION	ISSUE	DATE	DRAWN	CHK'D	APP'D	DESCRIPTION
	A	MAY12/08	KS	EP	EP	ISSUED FOR TENDER						
	B	JUL8/08	KS	EP	EP	ISSUED FOR CONSTRUCTION						
	C	DEC16/09	AS	WB	WB	RECORD DRAWING						

DESIGNED EP
DRAWN KS
CHECKED EP

Dayton & Knight Ltd.
CONSULTING ENGINEERS
#210-889 HARBOURSIDE DR., NORTH VANCOUVER, B.C. V7P 3S1
TEL.: (604) 990-4800 FAX: (604) 990-4805 www.dayton-knight.com

RESORT MUNICIPALITY OF WHISTLER
RAINBOW PARK PUMP STATION
HEATING AND VENTILATION – PLAN

SCALE: AS SHOWN
DRAWING No. 179.75.1
SHEET No. V2 ISSUE C

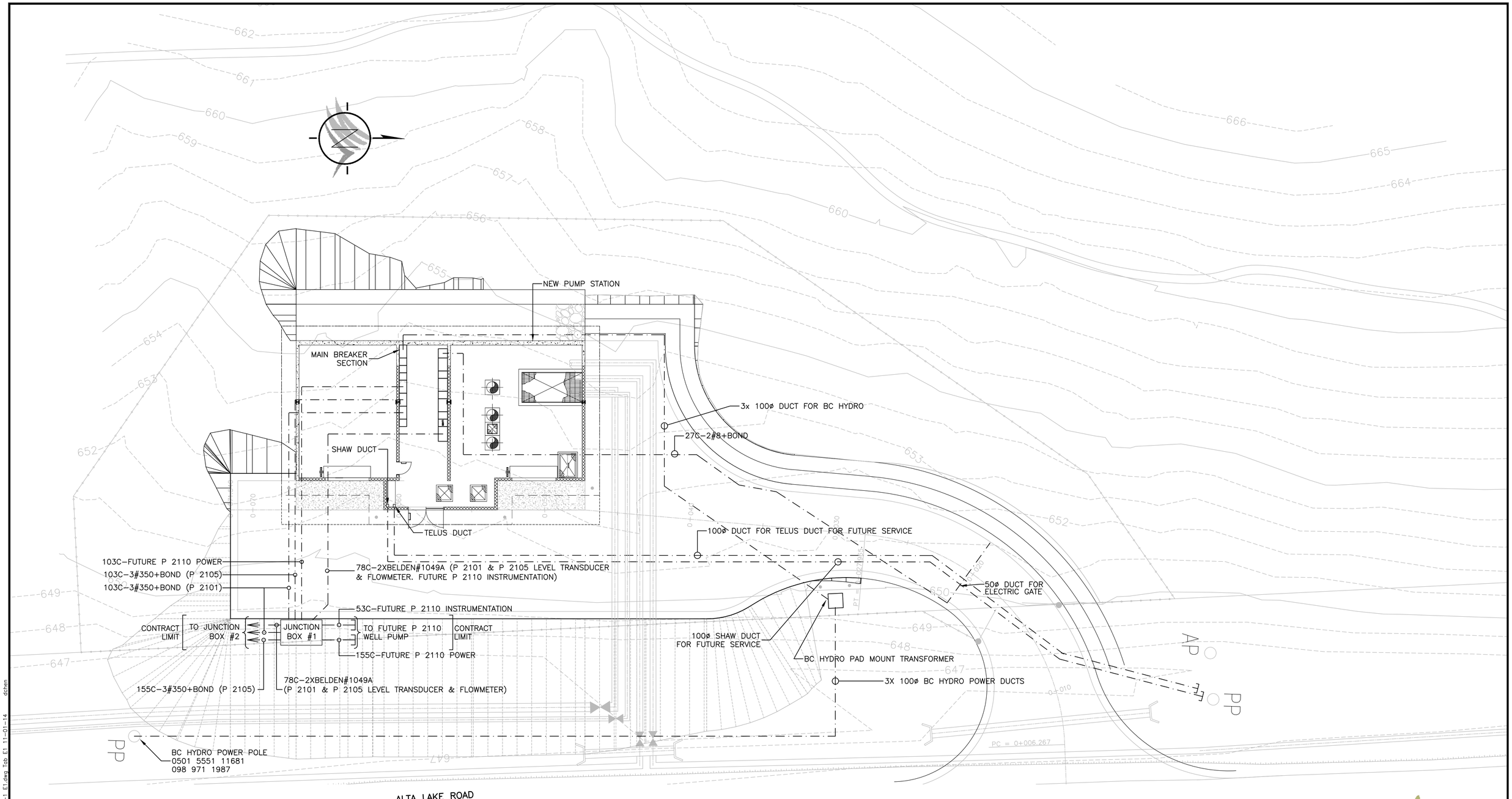

"These Record Drawings have been prepared based on information provided by the Contractor and others. Dayton & Knight Ltd. has not verified the accuracy or completeness of the information provided to them and does not warrant the accuracy or completeness of these Record Drawings. Users of these Record Drawings assume all risk of loss resulting from their use."

ELECTRICAL SITE LAYOUT

1:125

WHISTLER

PLOT: FULL 1:1 HALF 1:2

FILE: P:\Recdwgs\WHISTLER\179-75-1\ELECTRICAL\179-75-1 E1.dwg Tab: E1 11-01-14 dchen

AutoCAD DRAWING

REVISIONS	ISSUE	DATE	DRAWN	CHK'D	APP'D	DESCRIPTION	ISSUE	DATE	DRAWN	CHK'D	APP'D	DESCRIPTION
	A	MAY12/08	MM	MM	DR	ISSUED FOR TENDER	D	JAN23/09	MM	DR	DR	1 CO FOR POWER AND COMM. CABLE CHANGE
	B	JUL8/08	MM	MM	DR	ISSUED FOR CONSTRUCTION	E	JAN08/10	MM	DR	DR	RECORD DRAWINGS
	C	AUG29/08	MM	MM	DR	RFI #1 – ELECTRICAL						

DESIGNED MM
DRAWN MM
CHECKED DR

Dayton & Knight Ltd.
CONSULTING ENGINEERS
#210-889 HARBOURSIDE DR., NORTH VANCOUVER, B.C. V7P 3S1
TEL.: (604) 990-4800 FAX: (604) 990-4805 www.dayton-knight.com

RESORT MUNICIPALITY OF WHISTLER
RAINBOW PARK PUMP STATION
ELECTRICAL SITE LAYOUT

SCALE: 1:125
DRAWING No. 179.75.1
SHEET No. E1 ISSUE E

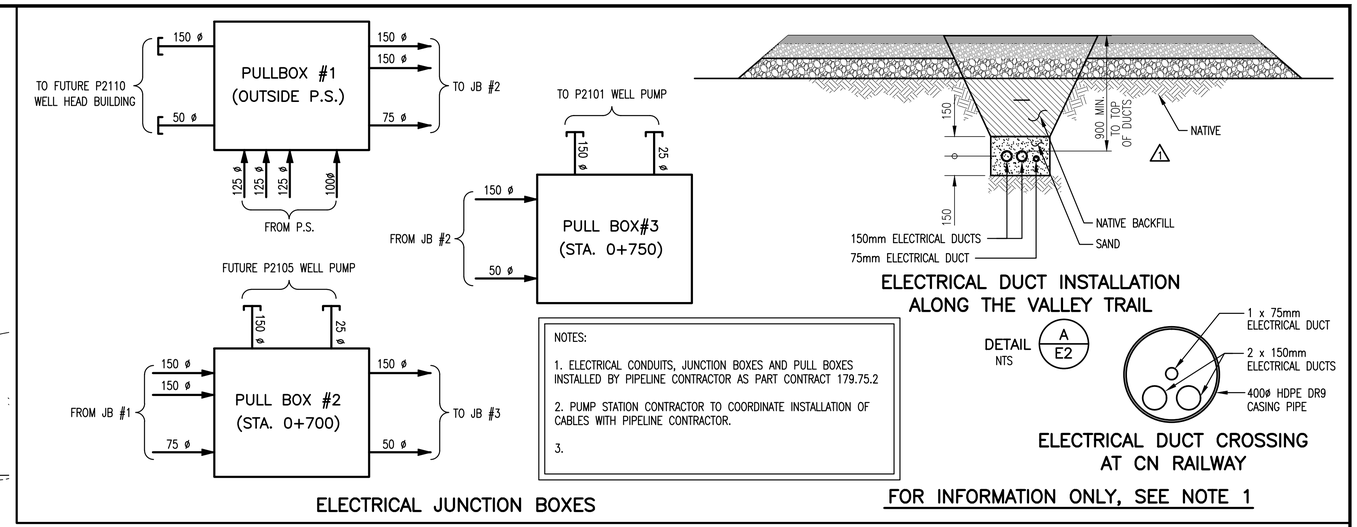

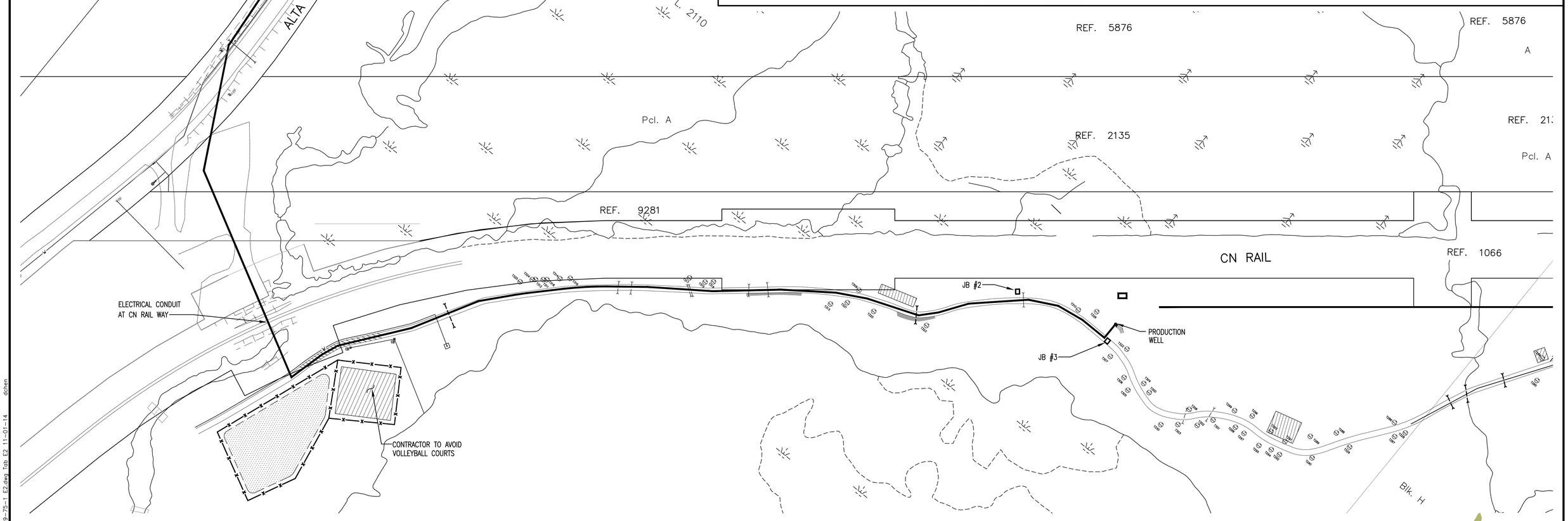

PLAN

"These Record Drawings have been prepared based on information provided by the Contractor and others. Dayton & Knight Ltd. has not verified the accuracy or completeness of the information provided to them and does not warrant the accuracy or completeness of these Record Drawings. Users of these Record Drawings assume all risk of loss resulting from their use."

WHISTLER

PLOT: FULL 2:1 HALF 1:1

FILE: P:\Recdwgs\WHISTLER\179-75-1\ELECTRICAL\179-75-1 E2.dwg Tab E2 11-01-14 dchen

AutoCAD DRAWING

REVISIONS	ISSUE	DATE	DRAWN	CHK'D	APP'D	DESCRIPTION	ISSUE	DATE	DRAWN	CHK'D	APP'D	DESCRIPTION
	A	MAY12/08	KS	WB	WB	ISSUED FOR TENDER						
	B	JUL8/08	KS	WB	WB	ISSUED FOR CONSTRUCTION						
	C	JAN8/10	MM	WB	WB	RECORD DRAWINGS						

DESIGNED WB
DRAWN KS
CHECKED SB

Dayton & Knight Ltd.
CONSULTING ENGINEERS
#210-889 HARBOURSIDE DR., NORTH VANCOUVER, B.C. V7P 3S1
TEL.: (604) 990-4800 FAX: (604) 990-4805 www.dayton-knight.com

RESORT MUNICIPALITY OF WHISTLER
RAINBOW PARK PUMP STATION
ELECTRICAL CONDUIT

SCALE: HOR. 1:1000
DRAWING No. 179.75.2
SHEET No. E2 ISSUE C

NOTES:
1. PROVIDE ONE 20A FEEDER FOR PUMP ROOM UNIT HEATERS AND ONE 20A FEEDER FOR CHLORINE ROOM UNIT HEATERS
2. PROIVDE SPACE FOR TWO 15A FEEDERS & TRANSFORMERS FOR FUTURE UV DISINFECTION UNITS
3. PROVIDE ONE 20A FEEDER FOR THE CHLORINE SYSTEM.

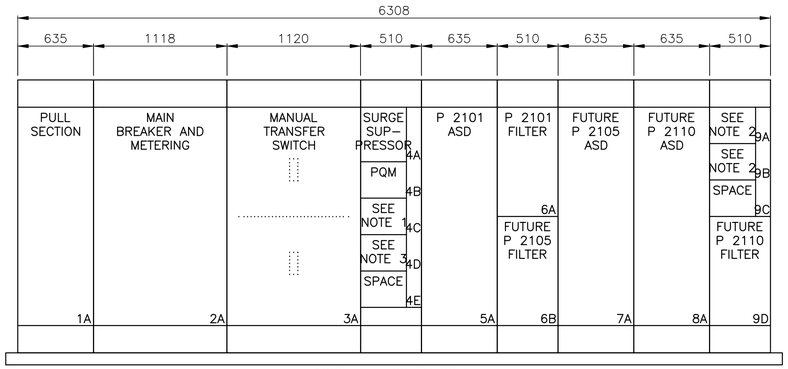

MCC 1A – SOUTH WALL

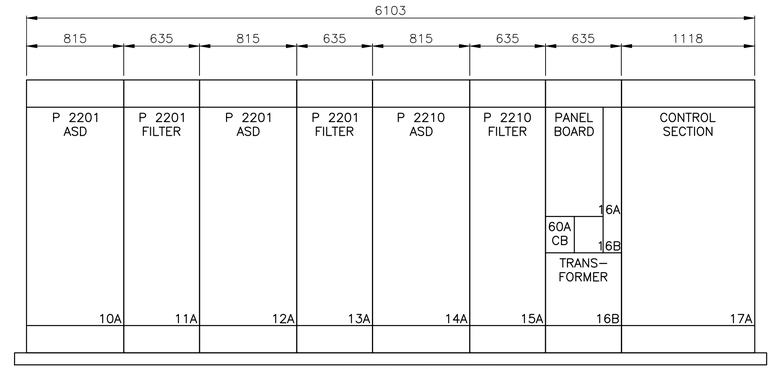

MCC 1B – NORTH WALL

RAINBOW PARK PUMP STATION MCC LAYOUT

1:25

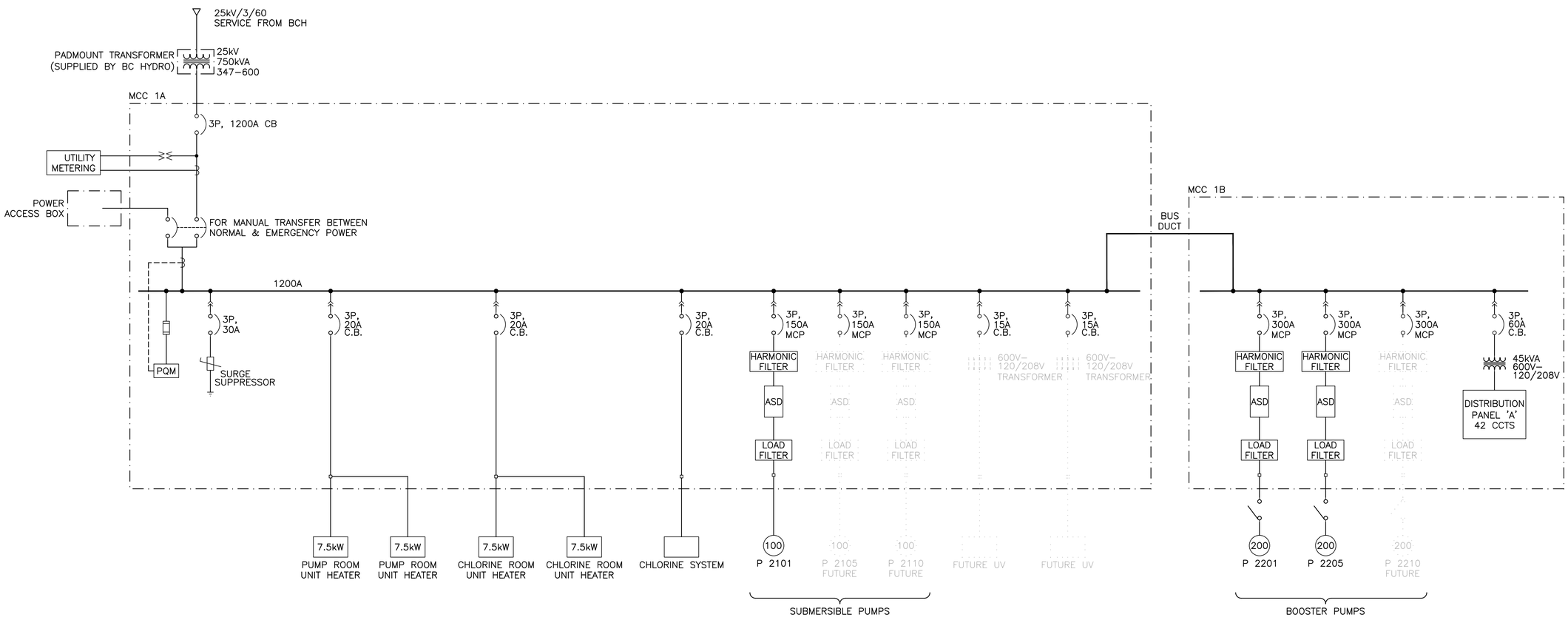

SINGLE LINE DIAGRAM

"These Record Drawings have been prepared based on information provided by the Contractor and others. Dayton & Knight Ltd. has not verified the accuracy or completeness of the information provided to them and does not warrant the accuracy or completeness of these Record Drawings. Users of these Record Drawings assume all risk of loss resulting from their use."

WHISTLER

PLOT: FULL 1:1 HALF 1:2

FILE: P:\Recdwgs\WHISTLER\179-75-1\ELECTRICAL\179-75-1 E3.dwg Tab E3 11-01-14 dchen

AutoCAD DRAWING

REVISIONS

ISSUE	DATE	DRAWN	CHK'D	APP'D	DESCRIPTION	ISSUE	DATE	DRAWN	CHK'D	APP'D	DESCRIPTION
A	MAY12/08	MM	MM	DR	ISSUED FOR TENDER						
B	JUL8/08	MM	MM	DR	ISSUED FOR CONSTRUCTION						
C	JAN08/10	MM	MM	DR	RECORD DRAWING						

DESIGNED MM
DRAWN MM
CHECKED DR

Dayton & Knight Ltd.
CONSULTING ENGINEERS
#210-889 HARBOURSIDE DR., NORTH VANCOUVER, B.C. V7P 3S1
TEL.: (604) 990-4800 FAX: (604) 990-4805 www.dayton-knight.com

RESORT MUNICIPALITY OF WHISTLER
RAINBOW PARK PUMP STATION
MCC LAYOUT AND SINGLE LINE DIAGRAM

SCALE: N.T.S.
DRAWING No. 179.75.1
SHEET No. E3 ISSUE C

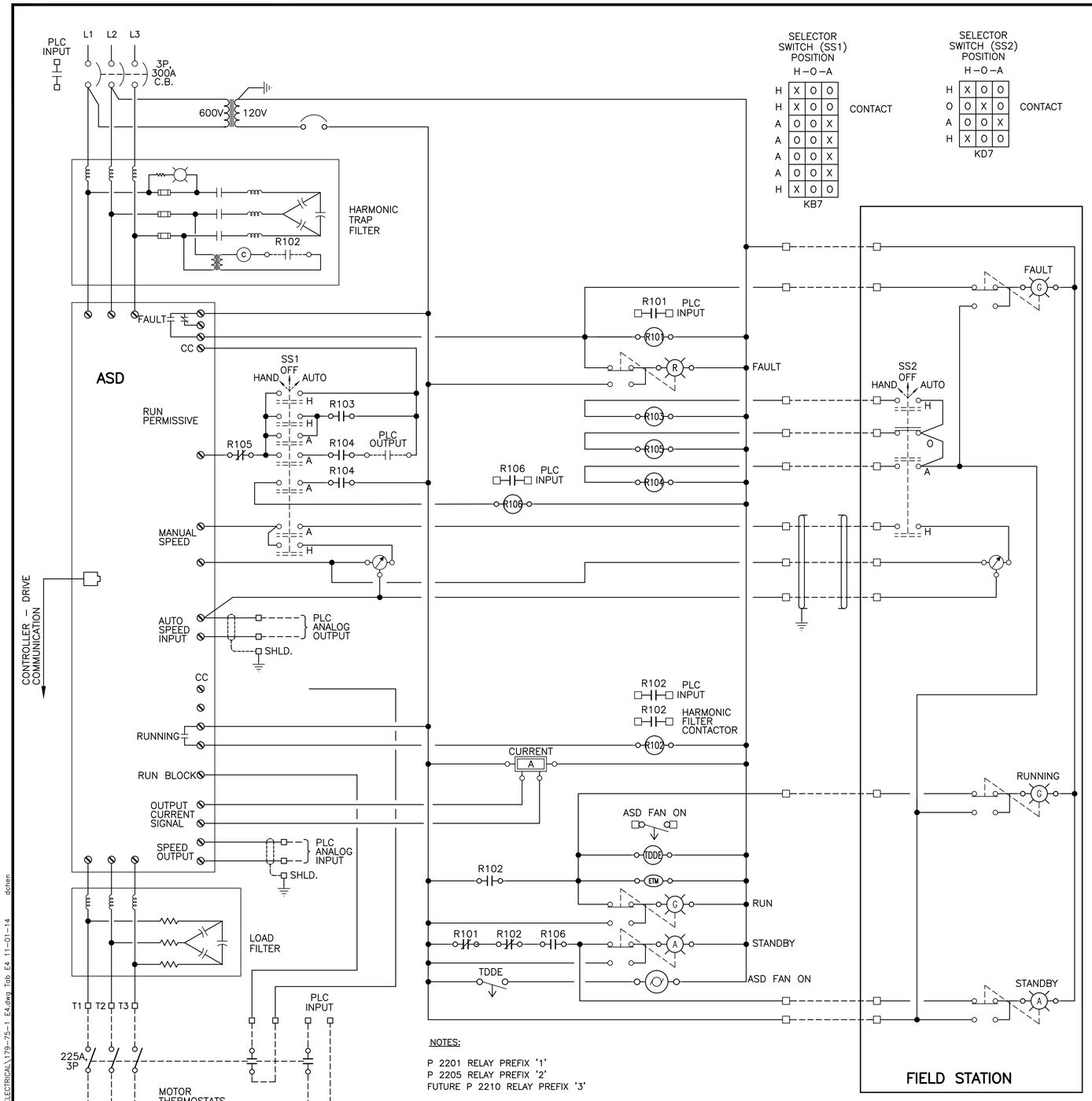

NOTES:

P 2201 RELAY PREFIX '1'
P 2205 RELAY PREFIX '2'
FUTURE P 2210 RELAY PREFIX '3'

P 2201, P 2205, P 2210 (FUTURE) ADJUSTABLE SPEED DRIVE WITH LOCAL/FIELD STATIONS AND ANALOG AUTO CONTROL (ASD–F–D)

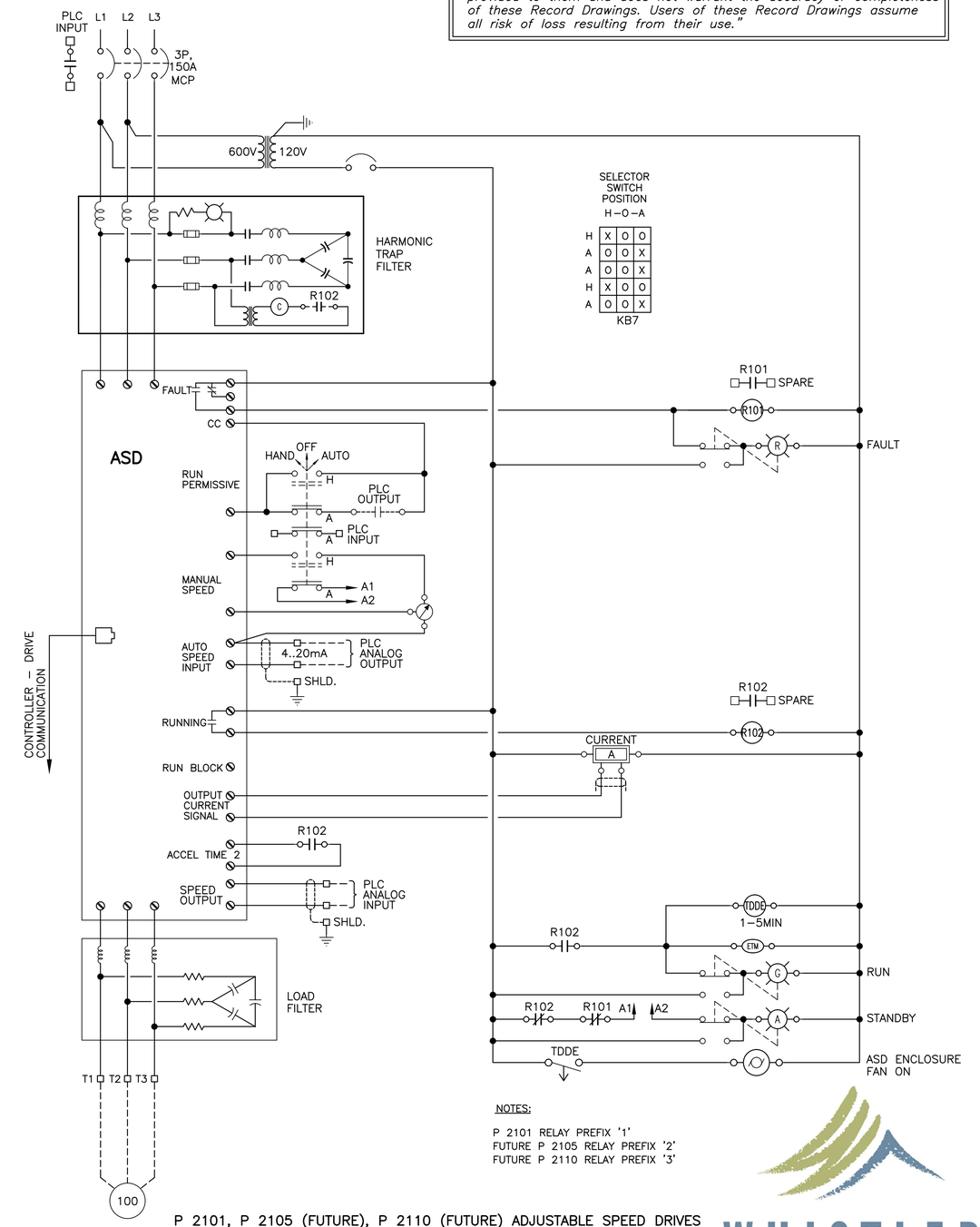

NOTES:

P 2101 RELAY PREFIX '1'
FUTURE P 2105 RELAY PREFIX '2'
FUTURE P 2110 RELAY PREFIX '3'

P 2101, P 2105 (FUTURE), P 2110 (FUTURE) ADJUSTABLE SPEED DRIVES AND DIGIBUS AUTO CONTROL (ASD–L–B)

"These Record Drawings have been prepared based on information provided by the Contractor and others. Dayton & Knight Ltd. has not verified the accuracy or completeness of the information provided to them and does not warrant the accuracy or completeness of these Record Drawings. Users of these Record Drawings assume all risk of loss resulting from their use."

WHISTLER

PLOT: FULL 1:1 HALF 1:2

FILE: P:\Recdwgs\WHISTLER\179-75-1\ELECTRICAL\179-75-1 E4.dwg Tab: E4 11-01-14 dchen

AutoCAD DRAWING

REVISIONS	ISSUE	DATE	DRAWN	CHK'D	APP'D	DESCRIPTION	ISSUE	DATE	DRAWN	CHK'D	APP'D	DESCRIPTION
	A	MAY12/08	MM	MM	DR	ISSUED FOR TENDER						
	B	JUL8/08	MM	MM	DR	ISSUED FOR CONSTRUCTION						
	C	JAN08/10	MM	MM	DR	RECORD DRAWING						

DESIGNED MM
DRAWN MM
CHECKED DR

Dayton & Knight Ltd.
CONSULTING ENGINEERS
#210-889 HARBOURSIDE DR., NORTH VANCOUVER, B.C. V7P 3S1
TEL.: (604) 990-4800 FAX: (604) 990-4805 www.dayton-knight.com

RESORT MUNICIPALITY OF WHISTLER
RAINBOW PARK PUMP STATION
DRIVE SCHEMATICS

SCALE: N.T.S.
DRAWING No. 179.75.1
SHEET No. E4 ISSUE C

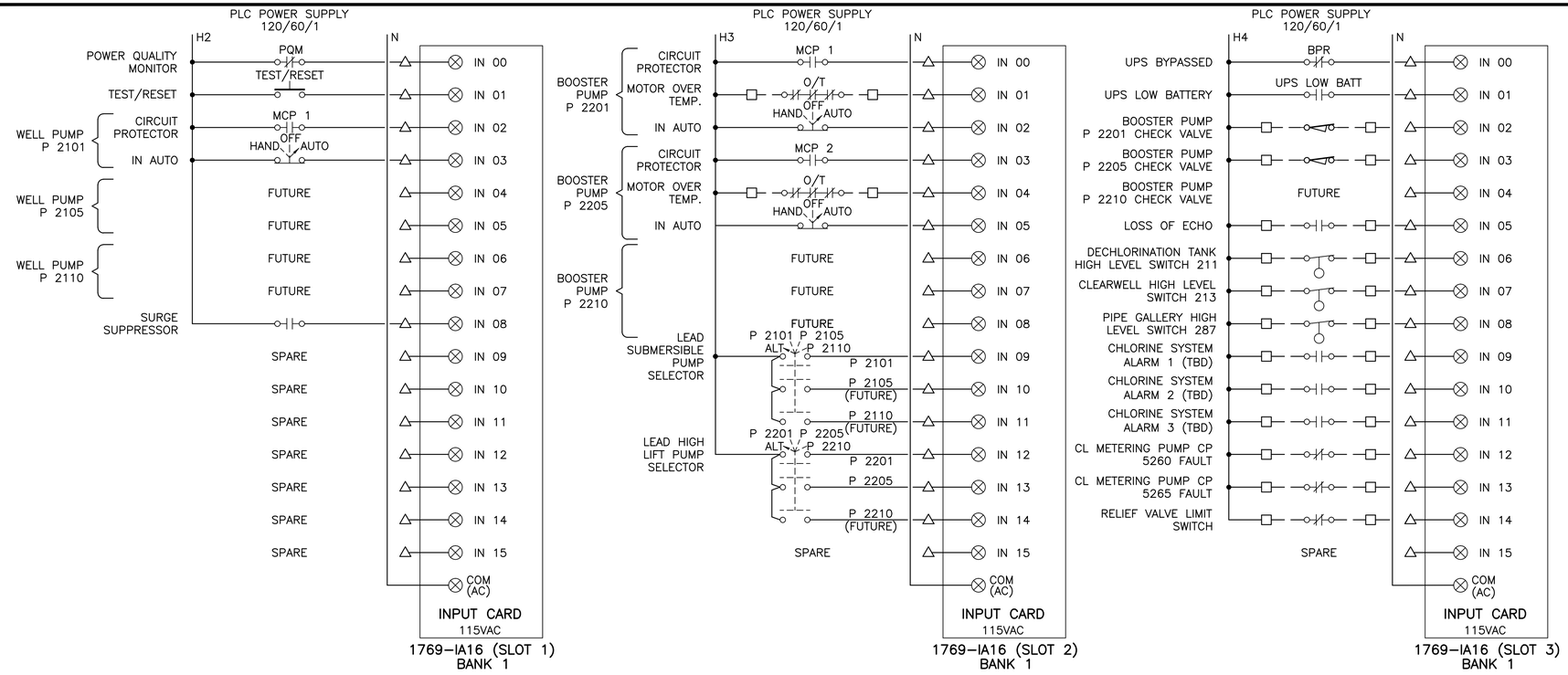

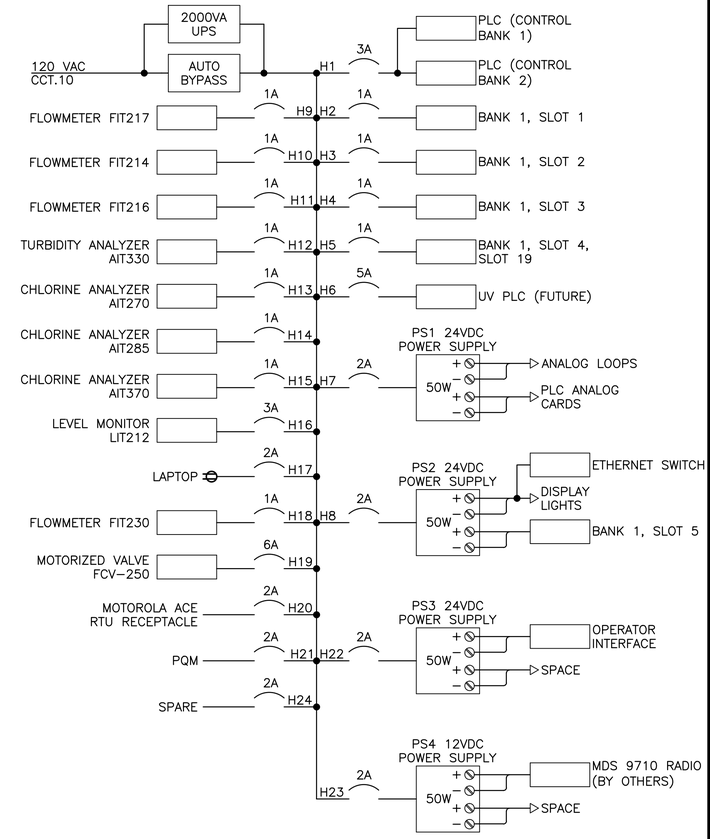

RAINBOW PARK PUMP STATION
UPS AND CONTROL POWER OVERVIEW

"These Record Drawings have been prepared based on information provided by the Contractor and others. Dayton & Knight Ltd. has not verified the accuracy or completeness of the information provided to them and does not warrant the accuracy or completeness of these Record Drawings. Users of these Record Drawings assume all risk of loss resulting from their use."

WHISTLER

RAINBOW PARK PUMP STATION PLC I/O

PLOT: FULL 1:1 HALF 1:2

FILE: P:\Recdwgs\WHISTLER\179-75-1\ELECTRICAL\179-75-1 E5 to E7.dwg Tab E5 11-01-14 dchen

AutoCAD DRAWING

REVISIONS

ISSUE	DATE	DRAWN	CHK'D	APP'D	DESCRIPTION
A	MAY12/08	MM	MM	DR	ISSUED FOR TENDER
B	JUL8/08	MM	MM	DR	ISSUED FOR CONSTRUCTION
C	27JAN09	MM	MM	DR	1 REVISION NO. 1
D	23FEB09	MM	MM	DR	2 REVISION NO. 2
E	JAN08/10	MM	MM	DR	RECORD DRAWING

DESIGNED MM
DRAWN MM
CHECKED DR

Dayton & Knight Ltd.
CONSULTING ENGINEERS
#210-889 HARBOURSIDE DR., NORTH VANCOUVER, B.C. V7P 3S1
TEL.: (604) 990-4800 FAX: (604) 990-4805 www.dayton-knight.com

RESORT MUNICIPALITY OF WHISTLER
RAINBOW PARK PUMP STATION
PLC I/O

SCALE: N.T.S.
DRAWING No. 179.75.1
SHEET No. E5 ISSUE E

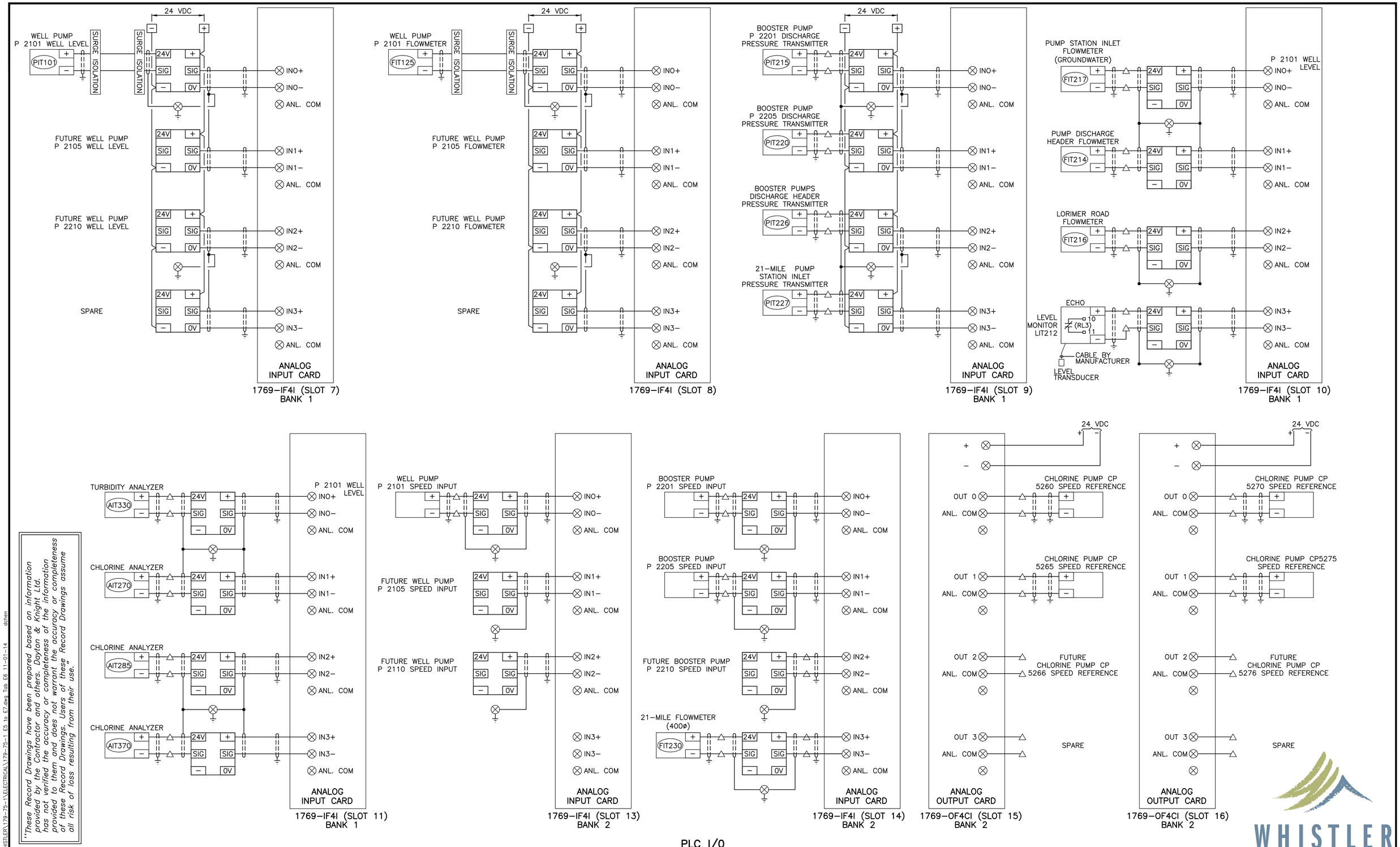

"These Record Drawings have been prepared based on information provided by the Contractor and others. Dayton & Knight Ltd. has not verified the accuracy or completeness of the information provided to them and does not warrant the accuracy or completeness of these Record Drawings. Users of these Record Drawings assume all risk of loss resulting from their use."

PLC I/O

WHISTLER

PLOT: FULL 1:1 HALF 1:2

FILE: P:\Recdwgs\WHISTLER\179-75-1\ELECTRICAL\179-75-1 E5 to E7.dwg Tab E6 11-01-14 dchen

AutoCAD DRAWING

REVISIONS	ISSUE	DATE	DRAWN	CHK'D	APP'D	DESCRIPTION	ISSUE	DATE	DRAWN	CHK'D	APP'D	DESCRIPTION
	A	MAY12/08	MM	MM	DR	ISSUED FOR TENDER	D	JAN08/10	MM	MM	DR	RECORD DRAWING
	B	JUL8/08	MM	MM	DR	ISSUED FOR CONSTRUCTION						
	C	27JAN09	MM	MM	DR	1 REVISION NO. 1						

DESIGNED MM
DRAWN MM
CHECKED DR

Dayton & Knight Ltd.
CONSULTING ENGINEERS
#210-889 HARBOURSIDE DR., NORTH VANCOUVER, B.C. V7P 3S1
TEL.: (604) 990-4800 FAX: (604) 990-4805 www.dayton-knight.com

RESORT MUNICIPALITY OF WHISTLER
RAINBOW PARK PUMP STATION
PLC I/O

SCALE: N.T.S.
DRAWING No. 179.75.1
SHEET No. E6 ISSUE D

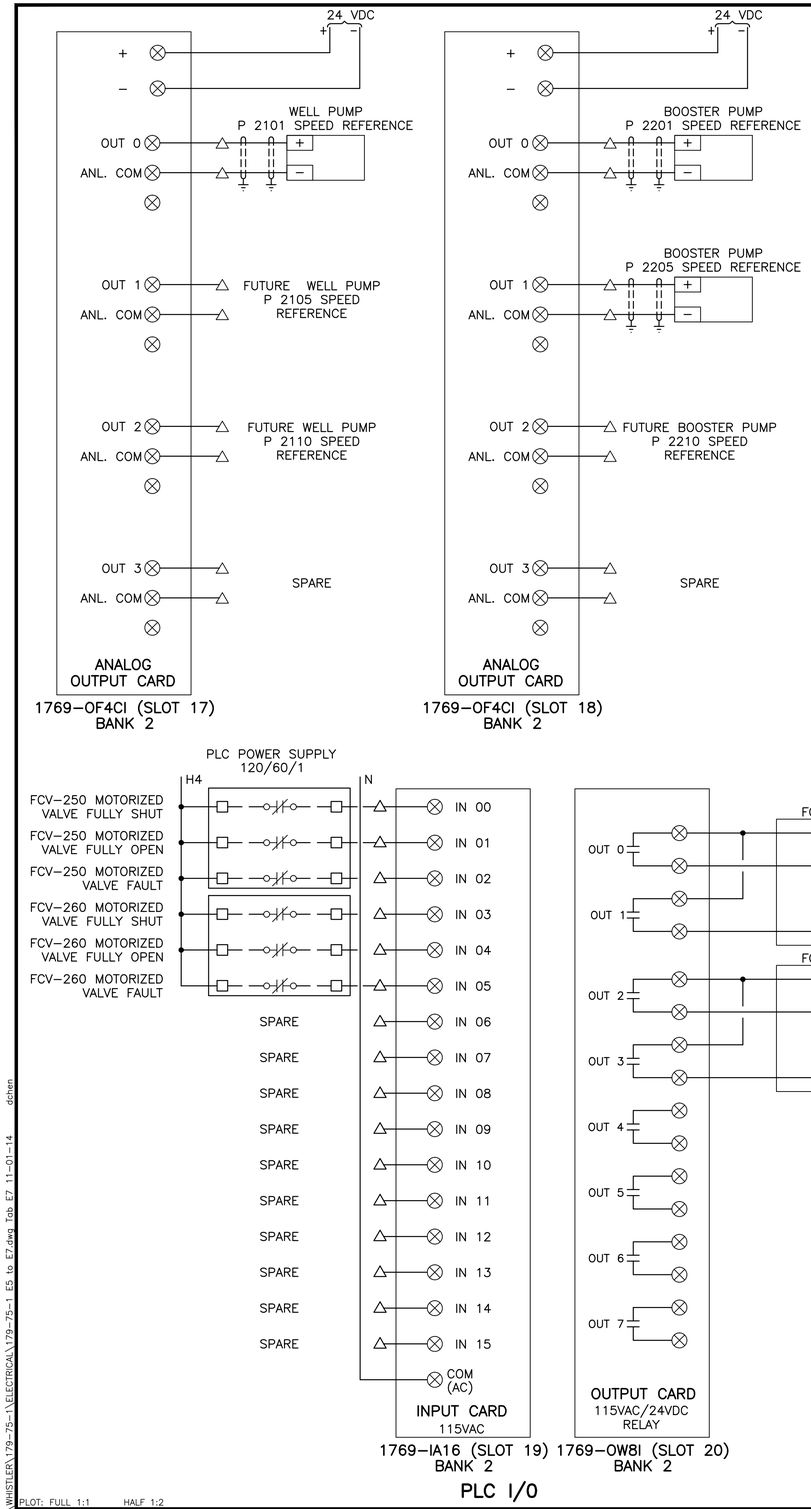

PLC I/O

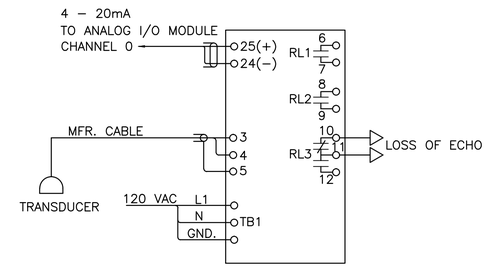

CLEARWELL – MILLTRONICS
LEVEL MONITOR SCHEMATIC

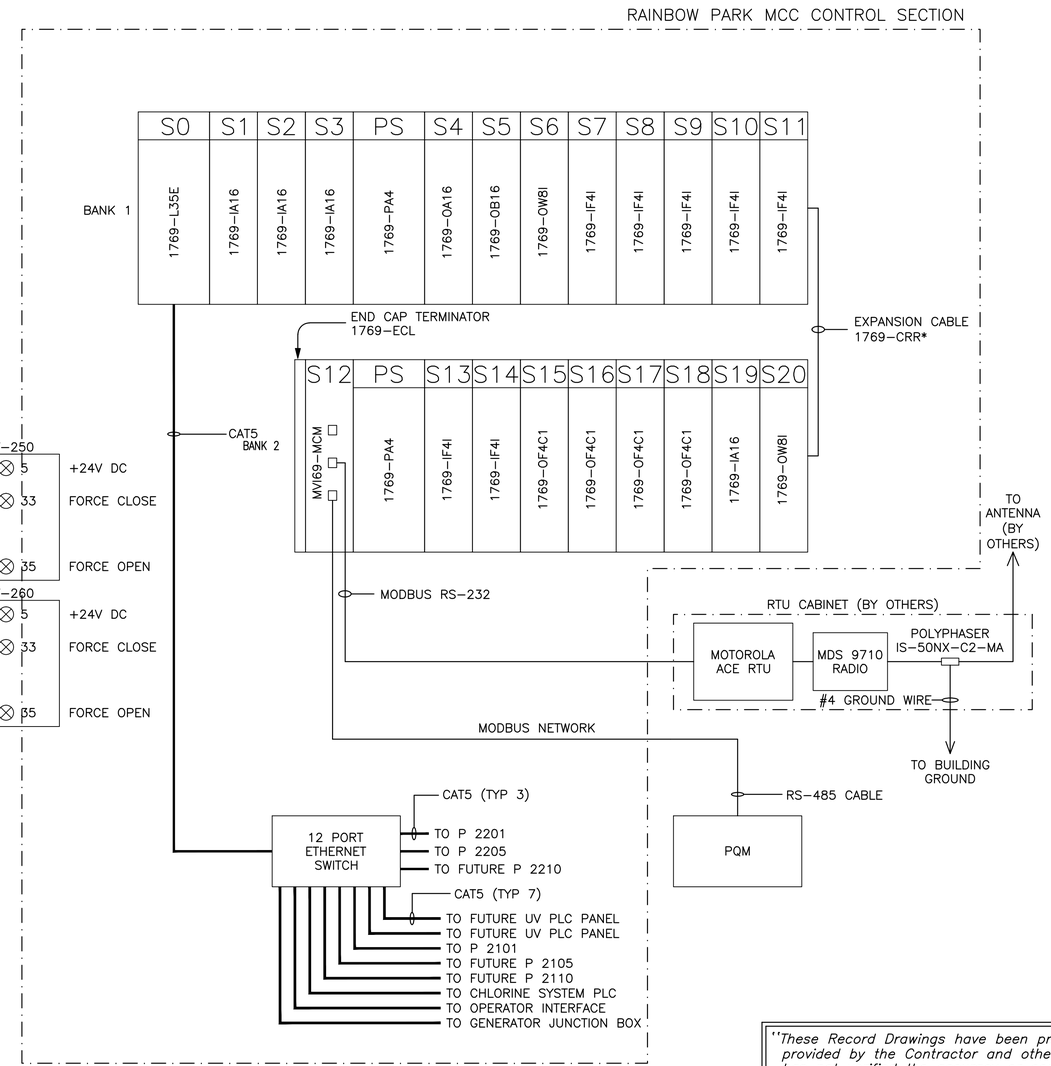

PLC LAYOUT

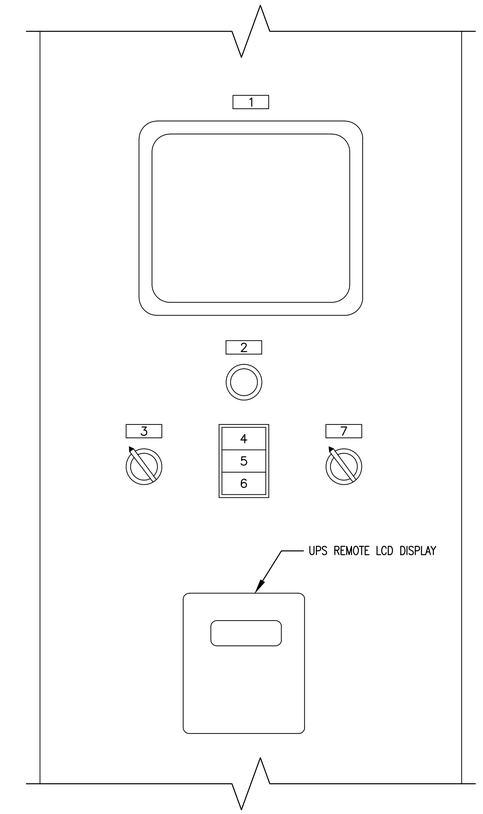

	NAMEPLATE LEGEND SCHEDULE	DEVICE
1	OPERATOR INTERFACE	GE TOUCHSCREEN
2	TEST/RESET	PUSH BUTTON (BLACK)
3	ALT–P 2101–P 2105–P 2110	4–POSITION SELECTOR SWITCH
4	POWER NORMAL	DISPLAY LIGHT, GREEN
5	COMMON ALARM	DISPLAY LIGHT, RED
6	PLC FAIL	DISPLAY LIGHT, RED
7	ALT–P 2101–P 2105–P 2110	4–POSITION SELECTOR SWITCH

CONTROL SECTION LAYOUT

"These Record Drawings have been prepared based on information provided by the Contractor and others. Dayton & Knight Ltd. has not verified the accuracy or completeness of the information provided to them and does not warrant the accuracy or completeness of these Record Drawings. Users of these Record Drawings assume all risk of loss resulting from their use."

WHISTLER

PLOT: FULL 1:1 HALF 1:2

FILE: P:\Recdwgs\WHISTLER\179-75-1\ELECTRICAL\179-75-1 E5 to E7.dwg Tab E7 11-01-14 dchen

AutoCAD DRAWING

REVISIONS	ISSUE	DATE	DRAWN	CHK'D	APP'D	DESCRIPTION	ISSUE	DATE	DRAWN	CHK'D	APP'D	DESCRIPTION
	A	MAY12/08	MM	MM	DR	ISSUED FOR TENDER	D	23FEB09	MM	MM	DR	2 REVISION NO. 2
	B	JUL8/08	MM	MM	DR	ISSUED FOR CONSTRUCTION	E	JAN08/10	MM	MM	DR	RECORD DRAWING
	C	27JAN09	MM	MM	DR	1 REVISION NO. 1						

DESIGNED MM
DRAWN MM
CHECKED DR

Dayton & Knight Ltd.
CONSULTING ENGINEERS
#210-889 HARBOURSIDE DR., NORTH VANCOUVER, B.C. V7P 3S1
TEL.: (604) 990-4800 FAX: (604) 990-4805 www.dayton-knight.com

RESORT MUNICIPALITY OF WHISTLER
RAINBOW PARK PUMP STATION
PLC I/O AND LAYOUT

SCALE: N.T.S.
DRAWING No. 179.75.1
SHEET No. E7 ISSUE E

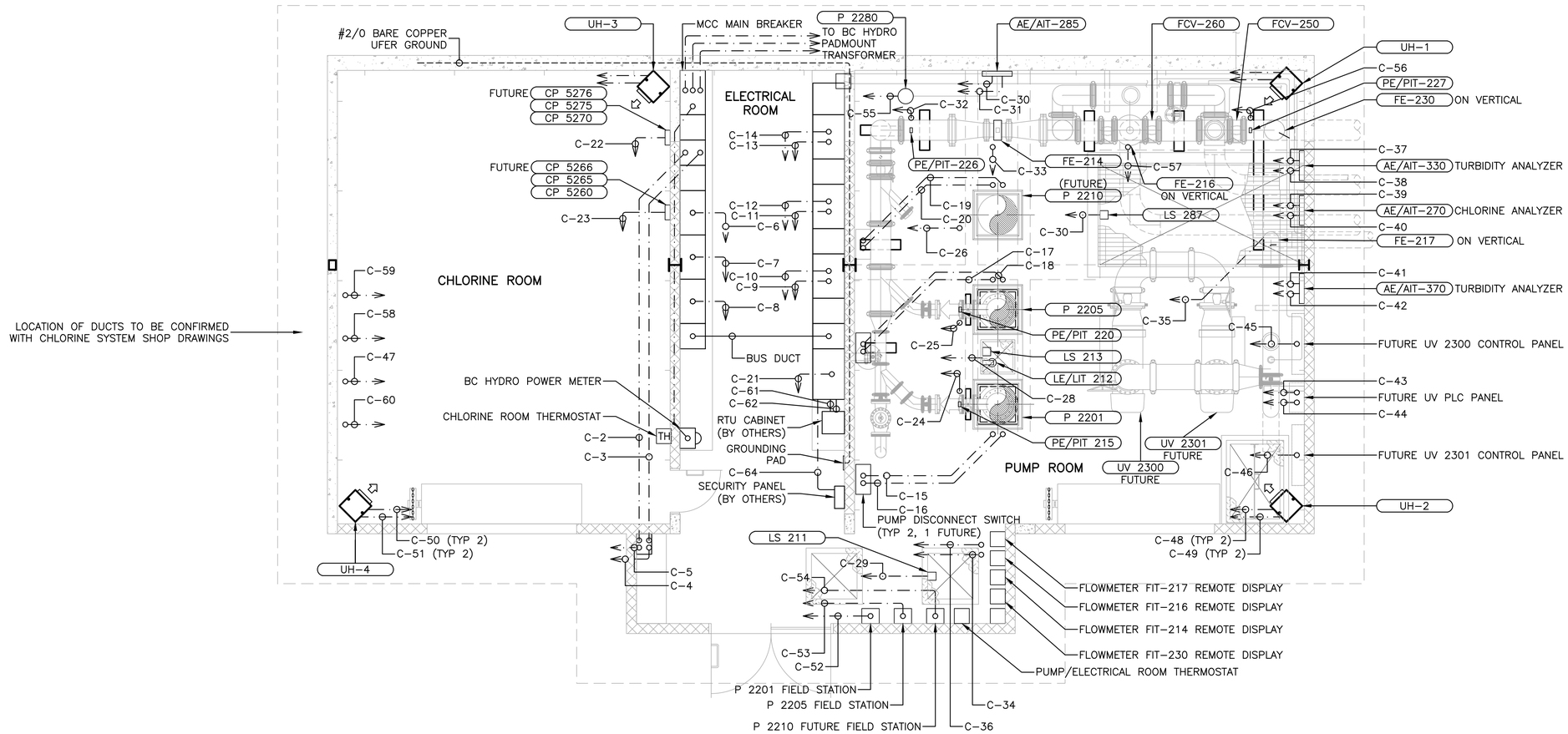

POWER AND CONTROL LAYOUT

SCALE: 1:50

"These Record Drawings have been prepared based on information provided by the Contractor and others. Dayton & Knight Ltd. has not verified the accuracy or completeness of the information provided to them and does not warrant the accuracy or completeness of these Record Drawings. Users of these Record Drawings assume all risk of loss resulting from their use."

WHISTLER

PLOT: FULL 1:1 HALF 1:2

FILE: P:\Recdwgs\WHISTLER\179-75-1\ELECTRICAL\179-75-1 E8 to E11.dwg Tab E8 11-01-14 dchen

AutoCAD DRAWING

REVISIONS	ISSUE	DATE	DRAWN	CHK'D	APP'D	DESCRIPTION	ISSUE	DATE	DRAWN	CHK'D	APP'D	DESCRIPTION
	A	MAY12/08	MM	MM	DR	ISSUED FOR TENDER	D	27JAN09	MM	MM	DR	1 REVISION NO. 1
	B	JUL8/08	MM	MM	DR	ISSUED FOR CONSTRUCTION	E	23FEB09	MM	MM	DR	2 REVISION NO. 2
	C	AUG29/08	MM	MM	DR	RFI #1 – ELECTRICAL	F	JAN08/10	MM	MM	DR	RECORD DRAWING

DESIGNED MM
DRAWN MM
CHECKED DR

Dayton & Knight Ltd.
CONSULTING ENGINEERS
#210-889 HARBOURSIDE DR., NORTH VANCOUVER, B.C. V7P 3S1
TEL.: (604) 990-4800 FAX: (604) 990-4805 www.dayton-knight.com

RESORT MUNICIPALITY OF WHISTLER
RAINBOW PARK PUMP STATION
POWER AND CONTROL LAYOUT

SCALE: 1:25
DRAWING No. 179.75.1
SHEET No. E8 ISSUE F

CABLE NO.	RACEWAY & CONDUCTORS	FROM	TO
C-1	3 x 100ø DUCTS	BC HYDRO PAD MOUNT TRANSFORMER	MCC SECTION 1A
C-2	155C-3#600+BOND+2#14	MCC SECTION 3 - TRANSFER SWITCH	GENSET RECEPTACLE
C-3	155C-3#600+BOND	MCC SECTION 3 - TRANSFER SWITCH	GENSET RECEPTACLE
C-4	27C-5#12+BOND	MCC SECTION 9 - PANELBOARD	GENSET RECEPTACLE
C-5	27C-RS-485 COMM. CABLE	MCC SECTION 17 - CONTROL SECTION	GENSET RECEPTACLE
C-6	103C	MCC SECTION 5	JUNCTION BOX "1" (FUTURE P 2110 WELL PUMP POWER)
C-7	103C-3#350 BOND	MCC SECTION 6	JUNCTION BOX "1" (FUTURE P 2105 WELL PUMP POWER)
C-8	103C-3#350 BOND	MCC SECTION 7	JUNCTION BOX "1" (P 2101 WELL PUMP POWER)
C-9	78C-3#250+BOND	MCC SECTION 14	P 2201 DISCONNECT SWITCH
C-10	27C-4#12	MCC SECTION 14	P 2201 DISCONNECT SWITCH
C-11	78C-3#250+BOND	MCC SECTION 12	P 2205 DISCONNECT SWITCH
C-12	27C-4#12	MCC SECTION 12	P 2205 DISCONNECT SWITCH
C-13	78C	MCC SECTION 10	FUTURE P 2210 DISCONNECT SWITCH
C-14	27C	MCC SECTION 10	FUTURE P 2210 DISCONNECT SWITCH
C-15	78C-3#250+BOND	P 2201 DISCONNECT SWITCH	P 2201
C-16	27C-2#12	P 2201 DISCONNECT SWITCH	P 2201
C-17	78C-3#250+BOND	P 2205 DISCONNECT SWITCH	P 2205
C-18	27C-2#12	P 2205 DISCONNECT SWITCH	P 2205
C-19	78C	FUTURE P 2210 DISCONNECT SWITCH	FUTURE P 2210
C-20	27C	FUTURE P 2210 DISCONNECT SWITCH	FUTURE P 2210
C-21	78C-2x BELDEN#1049A	MCC SECTION 17 - CONTROL SECTION	COMM. JUNCTION BOX "1" (1x P 2101, 1x P 2105 (FUTURE) WELL PUMP LEVEL TRANSDUCER & FLOW)
C-22	27C-2x BELDEN#8760 + 4#14	CP 5260, 5265 & 5266 COMMINICATION JUNCTION BOX	MCC SECTION 17 - CONTROL SECTION (PUMP SPEED INPUTS + PUMP STARTS)
C-23	27C-2x BELDEN#8760 + 8#14	CP 5270, 5275 & 5276 COMMINICATION JUNCTION BOX	MCC SECTION 17 - CONTROL SECTION (PUMP SPEED INPUTS + PUMP STARTS & FAULT INDICATIONS)
C-24	21C-2#14+BELDEN#8760	MCC SECTION 17 - CONTROL SECTION	PE/PIT-215
C-25	21C-2#14+BELDEN#8760	MCC SECTION 17 - CONTROL SECTION	PE/PIT-220
C-26	21C	MCC SECTION 17 - CONTROL SECTION	FUTURE PE/PIT-225
C-27	21C-2#14	MCC SECTION 17 - CONTROL SECTION	LS-287
C-28	27C-2#14 + MANUFACTURER CABLE (ULTRASONIC TRANSDUCER)	MCC SECTION 17 - CONTROL SECTION	LS-213 (FLOAT) & LE/LIT-212 (ULTRASONIC TRANSDUCER)
C-29	21C-2#14	MCC SECTION 17 - CONTROL SECTION	LS-211
C-30	21C-BELDEN #8760	MCC SECTION 17 - CONTROL SECTION	AE/AIT-285
C-31	21C-2x 2#12+BOND	MCC SECTION 17 - CONTROL SECTION	AE/AIT-285 (FROM UPS) & FCV-260 (FROM PANELBOARD)
C-32	21C-BELDEN #8760	MCC SECTION 17 - CONTROL SECTION	PE/PIT-226
C-33	21C-MANUFACTURER CABLE	FE-214	FIT-214 FLOWMETER REMOTE DISPLAY
C-34	41C-3x 2#12+BOND	FIT-214, FIT-216 & FIT-217 FLOWMETER REMOTE DISPLAYS	MCC SECTION 17 - CONTROL SECTION
C-35	21C-MANUFACTURER CABLE	FE-217	FIT-217 FLOWMETER REMOTE DISPLAY
C-36	41C-3x BELDEN#8760	FIT-214, FIT-216 & FIT-217 FLOWMETER REMOTE DISPLAYS	MCC SECTION 17 - CONTROL SECTION
C-37	21C-2x 2#12+BOND	MCC SECTION 17 - CONTROL SECTION	AE/AIT-330 & FIT-230 FLOWMETER REMOTE DISPLAY
C-38	41C-2x BELDEN#8760+10#14	MCC SECTION 17 - CONTROL SECTION	AE/AIT-330 (ANALOG), FIT-230 FLOWMETER REMOTE DISPLAY (ANALOG) & FCV-250 CONTROL (DISCRETE)
C-39	21C-2x 2#12+BOND	MCC SECTION 17 - CONTROL SECTION	AE/AIT-270 (FROM UPS) & FCV-250 (FROM UPS)
C-40	41C-BELDEN#8760	MCC SECTION 17 - CONTROL SECTION	AE/AIT-270
C-41	21C-2#12+BOND	MCC SECTION 17 - CONTROL SECTION	AE/AIT-370
C-42	41C-BELDEN#8760	MCC SECTION 17 - CONTROL SECTION	AE/AIT-370
C-43	27C-2#12+BOND	MCC SECTION 17 - CONTROL SECTION	FUTURE UV PLC PANEL
C-44	21C-CAT5	MCC SECTION 17 - CONTROL SECTION	FUTURE UV PLC PANEL
C-45	53C	MCC SECTION 4	FUTURE UV 2300 CONTROL PANEL
C-46	53C	MCC SECTION 8	FUTURE UV 2301 CONTROL PANEL
C-47	27C-CAT5+6#14	CHLORINE SYSTEM PLC	MCC SECTION 17 - CONTROL SECTION
C-48	21C-2#14	PUMP ROOM UNIT HEATERS	PUMP ROOM THERMOSTAT
C-49	27C-3#12+BOND	PUMP ROOM UNIT HEATERS	MCC SECTION 4
C-50	21C-2#14	CHLORINE ROOM THERMOSTAT	CHLORINE ROOM UNIT HEATERS
C-51	27C-3#12+BOND	MCC SECTION 4	CHLORINE ROOM UNIT HEATERS
C-52	41C-8#14+BELDEN#9367	MCC SECTION 14	P 2201 FIELD STATION
C-53	41C-8#14+BELDEN#9367	MCC SECTION 12	P 2205 FIELD STATION
C-54	41C-8#14+BELDEN#9367	MCC SECTION 10	P 2210 FIELD STATION
C-55	21C-4#14	P 2280	MCC SECTION 17 - CONTROL SECTION
C-56	27C-BELDEN#8760 + 10#14	MCC SECTION 17 - CONTROL SECTION	PE/PIT-227 (ANALOG) & FCV-260 CONTROL (DISCRETE)
C-57	21C-MANUFACTURER CABLE	FE-216	FIT-216 FLOWMETER REMOTE DISPLAY
C-58	53C-3#6+BOND	CHLORINE SYSTEM RECTIFIER	MCC SECTION 4
C-59	27C-3#10+NEUTRAL+BOND	CHLORINE SYSTEM CONTROL PANEL	MCC SECTION 9 - PANELBOARD
C-60	63C-2#4+BOND	CHLORINE SYSTEM WATER HEATER	MCC SECTION 9 - PANELBOARD
C-61	53C-2x 2#12+BOND	MCC SECTION 17 - CONTROL SECTION	RTU CABINET (RTU & RADIO POWER)
C-62	53C-RS232 COMM CABLE	MCC SECTION 17 - CONTROL SECTION	RTU CABINET
C-63	27C-MANUFACTURER CABLE	FE-230	FE-230 REMOTE DISPLAY
C-64	27C-12#14	MCC SECTION 17 - CONTROL SECTION	SECURITY PANEL

"These Record Drawings have been prepared based on information provided by the Contractor and others. Dayton & Knight Ltd. has not verified the accuracy or completeness of the information provided to them and does not warrant the accuracy or completeness of these Record Drawings. Users of these Record Drawings assume all risk of loss resulting from their use."

WHISTLER

PLOT: FULL 1:1 HALF 1:2

FILE: P:\Recdwgs\WHISTLER\179-75-1\ELECTRICAL\179-75-1 E8 to E11.dwg Tab E9 11-01-14 dchen

AutoCAD DRAWING

REVISIONS

ISSUE	DATE	DRAWN	CHK'D	APP'D	DESCRIPTION	ISSUE	DATE	DRAWN	CHK'D	APP'D	DESCRIPTION
A	MAY12/08	MM	MM	DR	ISSUED FOR TENDER	D	23FEB09	MM	MM	DR	2 REVISION NO. 2
B	JUL8/08	MM	MM	DR	ISSUED FOR CONSTRUCTION	E	JAN08/10	MM	MM	DR	RECORD DRAWING
C	27JAN09	MM	MM	DR	1 REVISION NO. 1						

DESIGNED MM
DRAWN MM
CHECKED DR

Dayton & Knight Ltd.
CONSULTING ENGINEERS
#210-889 HARBOURSIDE DR., NORTH VANCOUVER, B.C. V7P 3S1
TEL.: (604) 990-4800 FAX: (604) 990-4805 www.dayton-knight.com

RESORT MUNICIPALITY OF WHISTLER
RAINBOW PARK PUMP STATION
POWER AND CONTROL SCHEDULE

SCALE: NTS
DRAWING No. 179.75.1
SHEET No. E9 ISSUE E

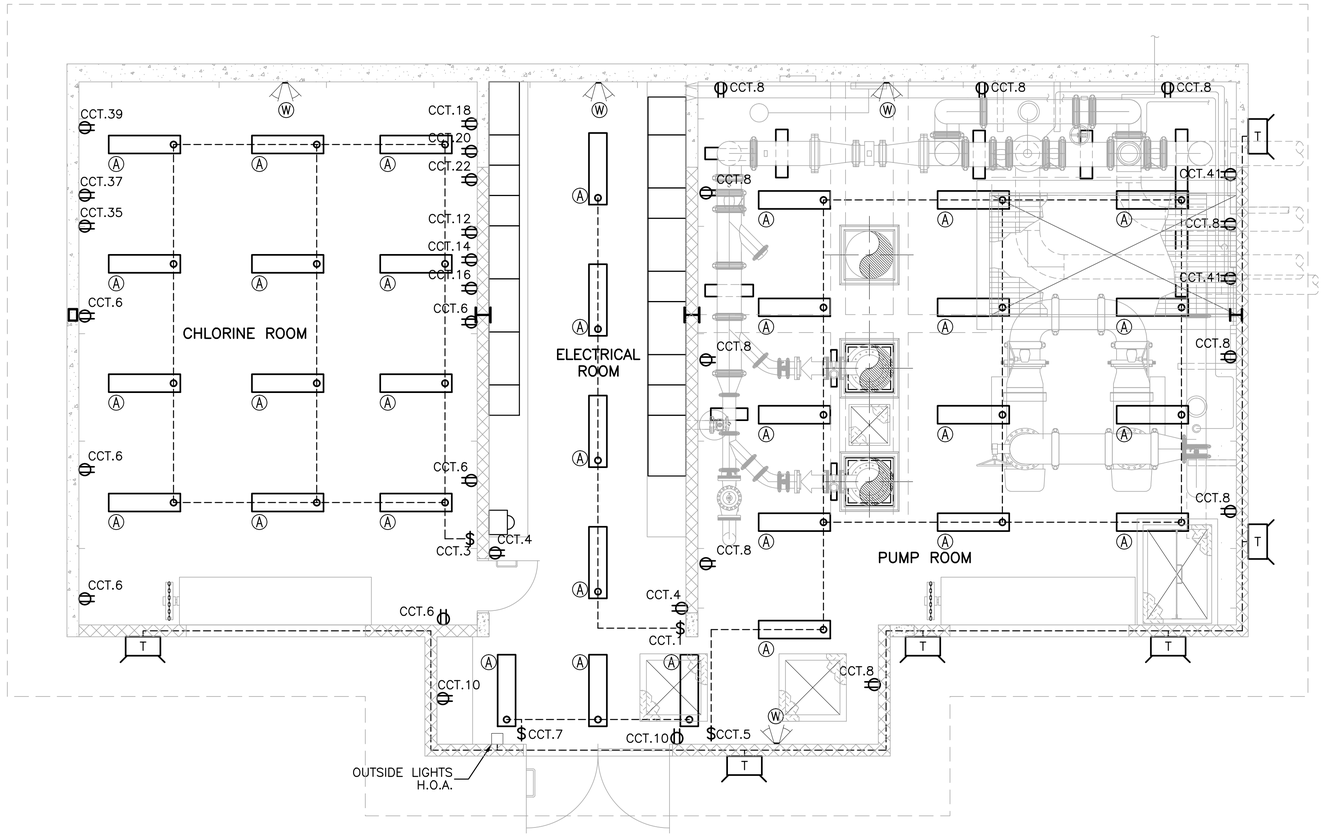

UTILITY AND LIGHTING LAYOUT

SCALE: 1:50

"These Record Drawings have been prepared based on information provided by the Contractor and others. Dayton & Knight Ltd. has not verified the accuracy or completeness of the information provided to them and does not warrant the accuracy or completeness of these Record Drawings. Users of these Record Drawings assume all risk of loss resulting from their use."

WHISTLER

PLOT: FULL 1:1 HALF 1:2

FILE: P:\Recdwgs\WHISTLER\179-75-1\ELECTRICAL\179-75-1 E8 to E11.dwg Tab E10 11-01-14 dchen

AutoCAD DRAWING

REVISIONS

ISSUE	DATE	DRAWN	CHK'D	APP'D	DESCRIPTION	ISSUE	DATE	DRAWN	CHK'D	APP'D	DESCRIPTION
A	MAY12/08	MM	MM	DR	ISSUED FOR TENDER	D	JAN08/10	MM	MM	DR	RECORD DRAWING
B	JUL8/08	MM	MM	DR	ISSUED FOR CONSTRUCTION						
C	AUG29/08	MM	MM	DR	RFI #1 – ELECTRICAL						

DESIGNED MM
DRAWN MM
CHECKED DR

Dayton & Knight Ltd.
CONSULTING ENGINEERS
#210-889 HARBOURSIDE DR., NORTH VANCOUVER, B.C. V7P 3S1
TEL.: (604) 990-4800 FAX: (604) 990-4805 www.dayton-knight.com

RESORT MUNICIPALITY OF WHISTLER
RAINBOW PARK PUMP STATION
UTILITY AND LIGHTING LAYOUT

SCALE: 1:25
DRAWING No. 179.75.1
SHEET No. E10 ISSUE D

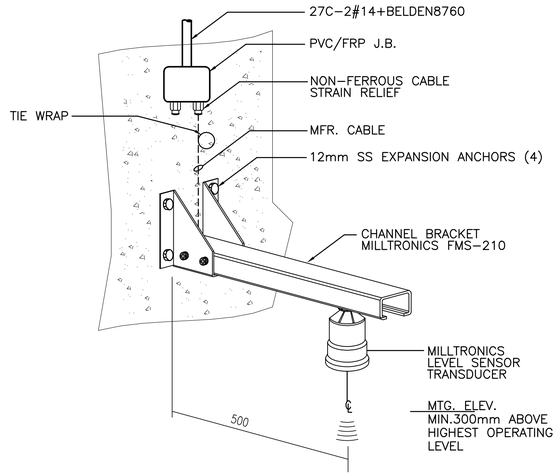

MILLTRONICS FMS–210 CHANNEL BRACKET FOR LEVEL SENSOR MOUNTING DETAIL (LE/LIT 212)

PANEL No. A , LOCATION MCC ,

VOLTS 120/208 , PHASE THREE , WIRE FOUR , CIRCUITS 42 , FEEDER DISTRIBUTION TRANSFORMER , BREAKER BOLT–ON , BUS 225A CU , MOUNTING MCC

CIRC. No.	No. POLES	TRIP AMPS	SERVICE	AØ kVA	BØ kVA	CØ kVA	WIRE SIZE	REMARKS	CIRC. No.	No. POLES	TRIP AMPS	SERVICE	AØ kVA	BØ kVA	CØ kVA	WIRE SIZE	REMARKS
1	1	15	LIGHTS – ELECTRICAL ROOM	0.5			#12		2	1	30	RECEPTACLES – CHLORINE ROOM	2.0			#10	
3	1	15	LIGHTS – ENTRANCE		1.0		#12		4	1	15	RECEPTACLES – ELECTRICAL ROOM		0.2		#12	GFI BREAKER
5	1	15	LIGHTS – PUMP ROOM			1.6	#12		6	1	15	RECEPTACLES – ENTRANCE			0.7	#12	GFI BREAKER
7	1	15	LIGHTS – CHLORINE ROOM	0.3			#12		8	1	15	RECEPTACLES – PUMP ROOM	0.7			#12	GFI BREAKER
9	1	15	LIGHTS – EXTERIOR		0.5		#12		10	1	15	CONTROL POWER / UPS		0.7		#12	GFI BREAKER
11	1	15	LIGHTS – EMERGENCY			0.2	#12		12	1	15	RECEPTACLE – GW DOSING PUMP			0.5	#12	GFI BREAKER
13	1	15	ELECTRICAL ROOM THERMOSTST, FAN & DAMPER	0.2			#12		14	1	15	RECEPTACLE – GW DOSING PUMP	0.5			#12	GFI BREAKER
15	1	15	CHLORINE ROOM THERMOSTAT & HEATER CONTROL		0.2		#12		16	1	15	RECEPTACLE – GW DOSING PUMP		0.5		#12	GFI BREAKER
17	1	15	CHLORINE ROOM FAN & DAMPER			0.2	#12		18	1	15	RECEPTACLE – SW DOSING PUMP			0.5	#12	GFI BREAKER
19	1	15	PUMP ROOM THERMOSTAT, FAN & DAMPER	0.2			#12		20	1	15	RECEPTACLE – SW DOSING PUMP	0.5			#12	GFI BREAKER
21	1	15	SECURITY SYSTEM RECEPTACLES		0.1		#12		22	1	15	RECEPTACLE – SW DOSING PUMP		0.5		#12	GFI BREAKER
23	1	15	SPARE			0.1	#12		24	1	15	SPARE			0.5	#12	GFI BREAKER
25	1	15	SPARE	0.1			#12		26	1	15	SPARE	0.5			#12	
27	1	15	PUMP – P 2280		0.1		#12		28	1	15	SPARE		0.5		#12	
29	1	15	SPARE			0.1	#12		30	1	15	SPARE			0.5	#12	
31	1	15	MOTORIZED VALVE ACTUATOR – FCV–260	1.0			#12		32	2 ↓	30	CHLORINE SYSTEM CONTROL PANEL	2.0			#12	
33	1	15	SPARE		0.5		#12	GFI, P 2280	34					2.0		#12	
35	1	15	RECEPTACLE – BLOWERS			2.0	#12		36	2 ↓	70	CHLORINE SYSTEM WATER HEATER			6.0	#10	
37	1	15	RECEPTACLE – BLOWERS	2.0			#12		38				6.0			#10	
39	1	15	RECEPTACLE – BLOWERS		2.0		#12		40	1	15	SPARE		0.5		#12	
41	1	15	SUMP PUMP			2.0	#12		42	1	15	SPARE			0.5	#12	
			SUB–TOTAL	3.4	4.4	6.2						SUB–TOTAL	12.2	6.4	12.2		
												TOTAL	15.6	10.8	18.4		

DISTRIBUTION PANEL SCHEDULE

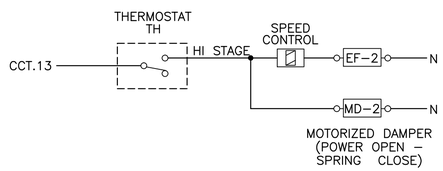

ELECRICAL ROOM FAN/DAMPER CONTROL

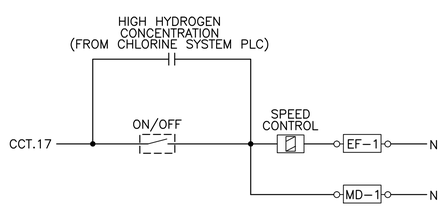

CHLORINE ROOM FAN/DAMPER CONTROL

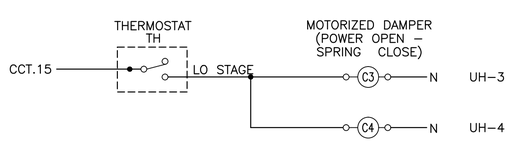

CHLORINE ROOM HEATER CONTROL

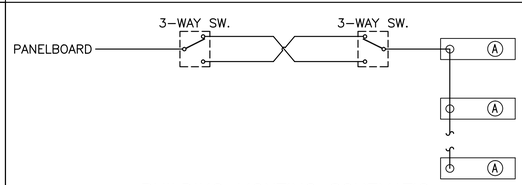

BUILDING LIGHTING SCHEMATIC

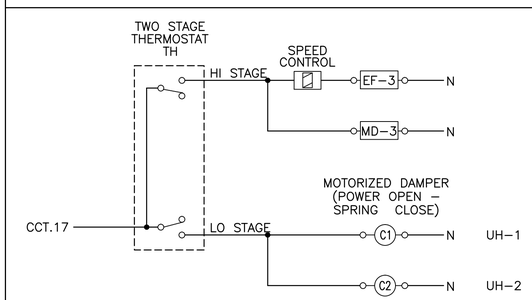

PUMP ROOM FAN/DAMPER/HEATER CONTROL

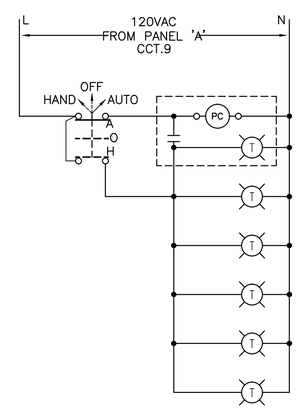

OUTSIDE LIGHT CONTROL

"These Record Drawings have been prepared based on information provided by the Contractor and others. Dayton & Knight Ltd. has not verified the accuracy or completeness of the information provided to them and does not warrant the accuracy or completeness of these Record Drawings. Users of these Record Drawings assume all risk of loss resulting from their use."

WHISTLER

PLOT: FULL 1:1 HALF 1:2

FILE: P:\Recdwgs\WHISTLER\179-75-1\ELECTRICAL\179-75-1 E8 to E11.dwg Tab E11 11-01-14 dchen

AutoCAD DRAWING

REVISIONS	ISSUE	DATE	DRAWN	CHK'D	APP'D	DESCRIPTION	ISSUE	DATE	DRAWN	CHK'D	APP'D	DESCRIPTION
	A	MAY12/08	MM	MM	DR	ISSUED FOR TENDER	D	23FEB09	MM	MM	DR	2 REVISION NO. 2
	B	JUL8/08	MM	MM	DR	ISSUED FOR CONSTRUCTION	E	JAN08/10	MM	MM	DR	RECORD DRAWING
	C	27JAN09	MM	MM	DR	1 REVISION NO. 1						

DESIGNED MM
DRAWN MM
CHECKED DR

Dayton & Knight Ltd.
CONSULTING ENGINEERS
#210-889 HARBOURSIDE DR., NORTH VANCOUVER, B.C. V7P 3S1
TEL.: (604) 990-4800 FAX: (604) 990-4805 www.dayton-knight.com

RESORT MUNICIPALITY OF WHISTLER
RAINBOW PARK PUMP STATION
DISTRIBUTION PANEL SCHEMATIC AND MISCELLANEOUS DETAILS

SCALE: NTS
DRAWING No. 179.75.1
SHEET No. E11 ISSUE E

WHISTLER

Contract Drawings For

P280 CHLORINATION SYSTEM UPGRADES

DETAILED DESIGN

RECORD DRAWINGS

Project No.
10224999

WHISTLER, BC
December, 2020

INDEX OF DRAWINGS

GENERAL

00G001 COVER SHEET W/INDEX
00S001 STRUCTURAL; CONTAINMENT WALL PLAN, SECTIONS AND DEMOLITION PLAN
00M001 PROCESS PIPING; PLAN AND SECTION

C:\pwworking\canada01\d0141487\00G001.dwg, 00G001, 8/11/2021 4:29:02 PM, EHAN

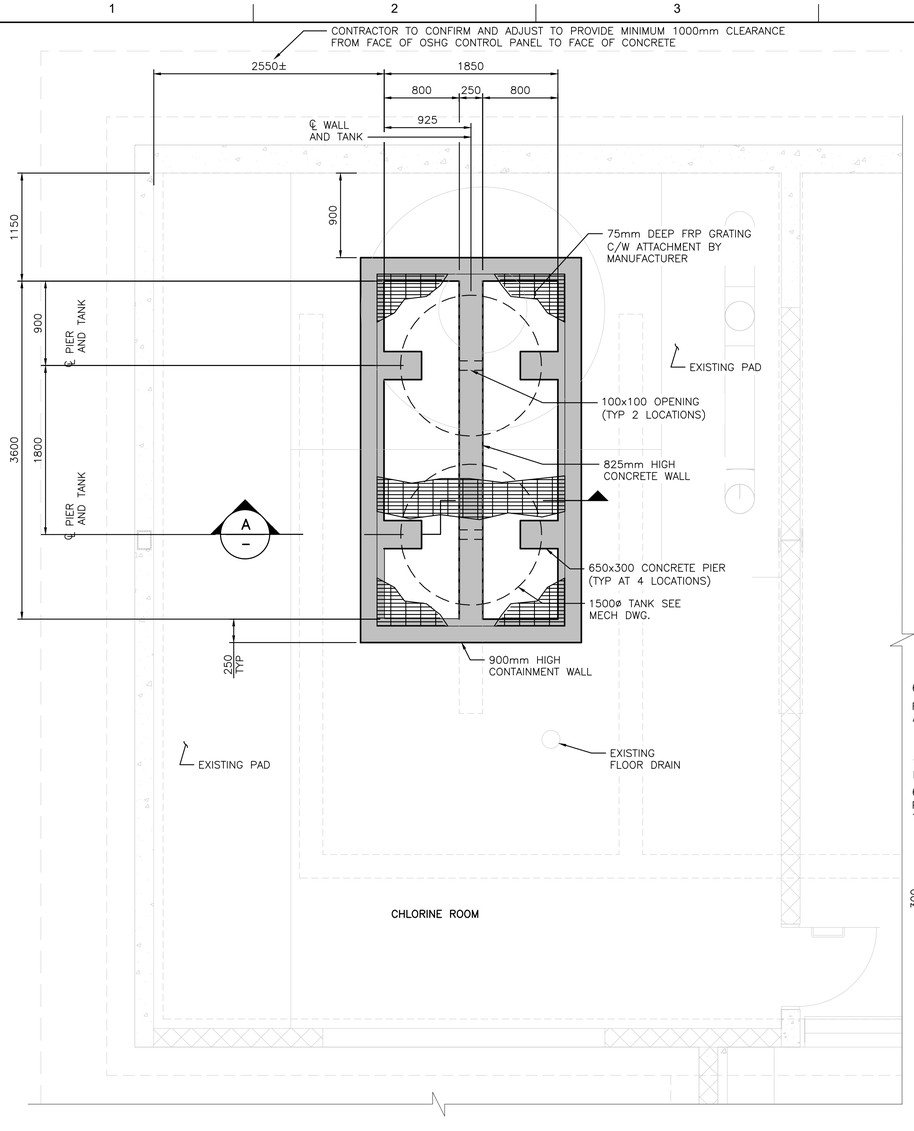

0 400 800 1200mm

CONTAINMENT WALL PLAN

PARTIAL PLAN AT EL. 652.00

1 / S001

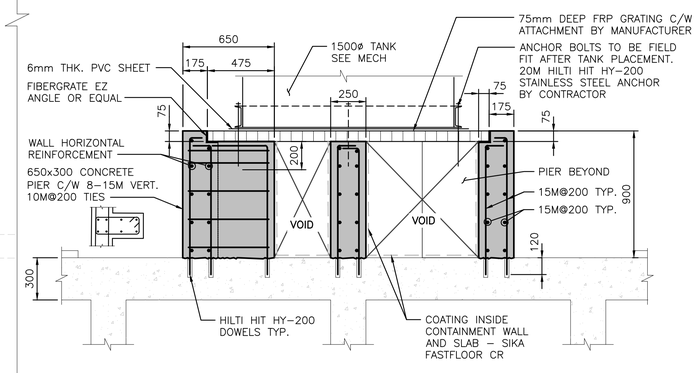

0 500 800mm

SECTION

CONTAINMENT WALL

A / S001

GENERAL

1. READ STRUCTURAL DRAWINGS IN CONJUNCTION WITH OTHER CONTRACT DRAWINGS AND SPECIFICATIONS.
2. BEFORE PROCEEDING WITH WORK, CHECK ALL DIMENSIONS AND ELEVATIONS SHOWN ON THE STRUCTURAL DRAWINGS,
3. BEFORE PROCEEDING WITH WORK, CHECK AND VERIFY ALL DIMENSIONS & EXISTING CONDITIONS AT THE SITE.
4. CONSTRUCTION OF THIS PROJECT INCLUDING MATERIAL & WORKMANSHIP SHALL BE IN ACCORDANCE WITH CSA STANDARDS AND SPECIFICATIONS AS REFERENCE HEREIN.
5. AVOID ANY DAMAGE TO EXISTING SERVICES AND UTILITIES AND ASSUME RESPONSIBILITY TO RESTORE SERVICES IMMEDIATELY AFTERWARDS.
6. ALL DIMENSIONS ARE IN MILLIMETER.
7. PRIOR TO ANCHOR BOLTS INSTALLATION CONTRACTOR TO SCAN EXISTING SLAB TO LOCATE EXISTING REBARS AND CONDUIT.

DESIGN

DESIGN LOADS:

LIVE LOAD FOR FRP GRATING: 2.4 kPa
TANK WEIGHT: 45.0 kN – PER TANK
FLOOR LIVE LOAD: 3.6 kPa

CONCRETE & REINFORCEMENT

1. ALL CONCRETE & REINFORCEMENT CONSTRUCTION SHALL CONFORM TO CSA STANDARD A23.1 AND ALL CONTRACT SPECIFICATIONS. ALL TESTING SHALL COMPLY WITH CSA STANDARD A23.2.
2. CONCRETE: TO CSA–A23.1

TABLE 1

STRUCTURAL ELEMENT	CLASS OF EXPOSURE	28 DAYS COMPRESSIVE STRENGTH (MPa)
CONTAINMENT WALL	N	35

3. CLEAR COVER TO REINFORCING STEEL, UNLESS NOTED OTHERWISE:

TABLE 2

TYPE OF MEMBER OR EXPOSURE CONDITION		CAST–IN–PLACE CONC. COVER
1	CONCRETE WALL – PRINCIPAL REINFORCEMENT	50mm

4. ALL REINFORCING STEEL SHALL CONFORM TO CAN/CSA–G30.18–M GRADE 400W.
5. FRP GRATING TYPE: HI5830 PULTRUDED BY FIBERGRATE.

CONSTRUCTION

1. THE CONTRACTOR SHALL VERIFY THE EXISTING STRUCTURE IS SOUND AND FREE OF CORROSION, CRACKING, DELAMINATION OR OTHER DISTRESS, PRIOR TO MAKING CONNECTIONS OR ALTERATION TO EXISTING STRUCTURE.
2. PROVIDE CHAMFERS AND REGLETS AS SHOWN ON STRUCTURAL DRAWINGS WHERE NOT SHOWN, PROVIDE 25mm CHAMFER.
3. WHERE NEW CONCRETE OR GROUT IS TO BE PLACED AGAINST EXISTING CONCRETE, SURFACES SHALL BE PREPARED AS FOLLOWS:

– ROUGHEN CONCRETE SURFACE TO A FULL AMPLITUDE OF 5 mm.

– DO NOT DAMAGE OR CUT EXISTING REBAR UNLESS SHOWN. OBTAIN APPROVAL FROM OWNER'S REPRESENTATIVE WHEREVER CUT IS REQUIRED.

– CLEAN SURFACES. REMOVE VISIBLE OIL, GREASE, DUST, DIRT, SCALE, RUST, OXIDES, CORROSION PRODUCTS AND OTHER FOREIGN MATTER.

– PLACE NEW CONCRETE ONLY AGAINST EXISTING CONCRETE WHICH IS "SATURATED SURFACE DRY".

– APPLY BONDING AGENT ON CONCRETE SURFACES PRIOR TO CASTING OF NEW CONCRETE.

LEGEND:

– NEW CONCRETE

– EXISTING CONCRETE

ISSUE	DATE	DESCRIPTION
1	08/10/2021	RECORD DRAWINGS
0	12/08/2020	ISSUE FOR CONSTRUCTION

PROJECT MANAGER	W. BAYLESS
CIVIL	
STRUCTURAL	X. LIU
ARCHITECTURAL	
PROCESS	
MECHANICAL	
ELECTRICAL	
INSTRUMENTATION	
PROJECT NUMBER	10224999

WHISTLER

Whistler, BC

RESORT MUNICIPALITY OF WHISTLER
P280 PUMP STATION

2020

STRUCTURAL
CONTAINMENT WALL PLAN, SECTIONS AND DEMOLITION PLAN

FILENAME: 00S001.dwg
SCALE: AS SHOWN

SHEET: **00S001**

C:\pwworking\canada01\d0141487\00S001.dwg, 00S001, 8/11/2021 4:37:02 PM, EHAN

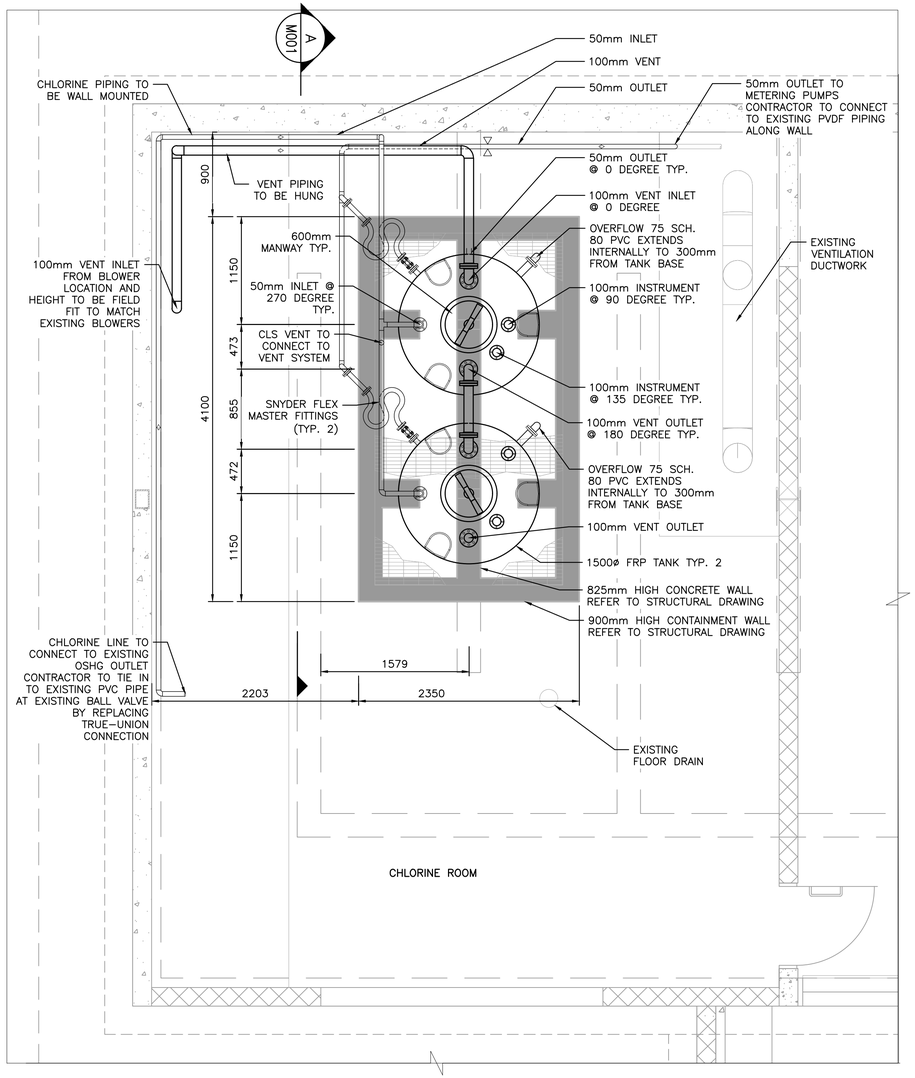

PARTIAL PLAN 0 400 800 1200mm 1 00M001

PROCESS PIPING

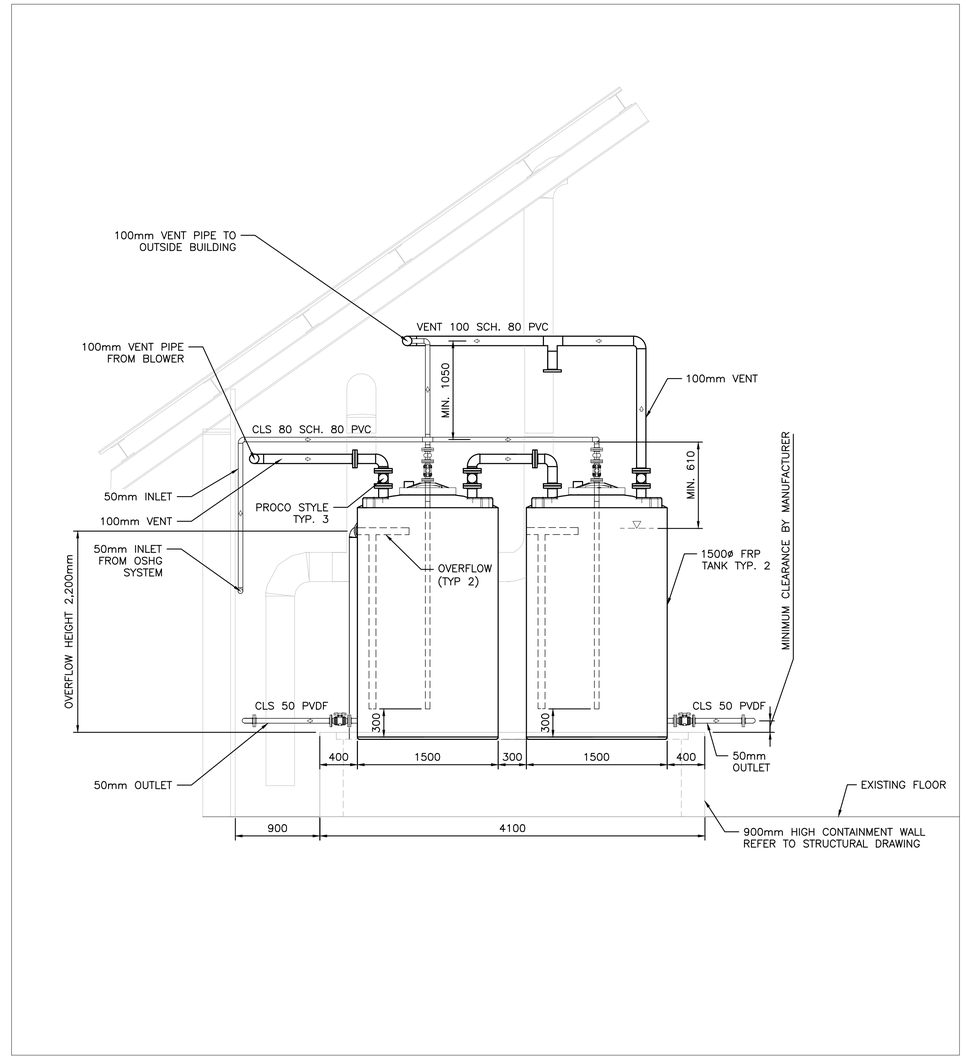

SECTION 0 400 800 1200mm A 00M001

PROCESS PIPING

GENERAL

1. READ MECHANICAL DRAWINGS IN CONJUNCTION WITH STRUCTURAL DRAWINGS AND SPECIFICATIONS.
2. ALL DIMENSIONS ARE IN MILLIMETER.
3. PAINTING
   CLS PVC PIPING – YELLOW
   ALL OTHER PIPING – UNCOATED
4. PVC WELDING. SCH. 80 PVC TO BE WELDED IN ACCORDANCE WITH ASTM B31.3 PROCESS PIPING REQUIREMENTS USING WELD–ON 724 CEMENT AND PRIMER. ALL JOINTS TO BE DEBURRED AND BEVELED.
5. PVDF INSTALLATION SHALL BE PERFORMED BY FACTORY CERTIFIED AND TRAINED INSTALLER IN ACCORDANCE WITH MANUFACTURE'S ISO PROCEDURES, ASTM D 2657 AND DVS 2207–15 OR DEMONSTRATION OF EQUIVALENT QUALIFICATIONS. JOINTS TO BE BUTT FUSED USING ELECTRONICALLY CONTROLLED HEATING ELEMENTS FOR ACCURATE WELDING TEMPERATURES. TOOLS SHOULD ALSO INCORPORATE PLANING UNITS TO FACE ENDS PRIOR TO HEATING. BUTT–FUSION EQUIPMENT SUPPLIED SHALL WELD JOINTS BASED ON FORCE OR PRESSURE AND NOT MECHANICAL STOPS.
6. ALL PIPING TO BE FLUSHED AND PRESSURE TESTED AT 100psi FOR 24 HOURS. NO VISIBLE LEAK TO BE OBSERVED.
7. CHLORINE SOLUTION PIPING TO BE SLOPED TO VENT OR BACK TO TANK.
8. PIPE SUPPORTS TO BE SPACED:

PIPE SIZES – mm	MAXIMUM SPAN – m
32 AND LESS	0.9
38 THRU 75	1.2
100 AND GREATER	1.5

   PIPE HANGERS TO BE GALVANIZED CLEVIS STYLE HANGERS. WALL MOUNTED PIPING TO UTILIZE UNISTRUT CUSH–CLAMP STYLE. PIPING TO BE FREE TO MOVE LATERALLY THROUGH ALL HANGERS AND SUPPORTS.
9. CONTRACTOR TO FIELD CONFIRM ALIGNMENT OF VENT PIPING TO AVOID EXISTING LIGHTING AND EXTENSION ROD.
10. BALL VALVES SHALL BE PVC OR PVDF TO MATCH PIPING MATERIAL. VALVES SHALL BE FLANGE X FLANGE. CHLORINE APPLICATIONS SHALL BE PROVIDED WITH A VITON GASKET AND THE BALL SHALL BE VENTED BY DRILLING A HOLE ON THE UPSTREAM SIDE OF THE BALL IN THE CLOSED POSITION. AIR LINES SHALL BE PROVIDED WITH AN EPDM GASKET.
11. CONTRACTOR TO SUPPLY NEW FLEX MASTER FITTINGS ON THE OUTLET FROM THE CHLORINE TANKS. EXISTING FITTING NOT TO BE–USED.

ISSUE	DATE	DESCRIPTION
1	08/10/2021	RECORD DRAWINGS
0	12/08/2020	ISSUE FOR CONSTRUCTION

PROJECT MANAGER	W. BAYLESS
CIVIL	
STRUCTURAL	
ARCHITECTURAL	
PROCESS	W. BAYLESS
MECHANICAL	
ELECTRICAL	
INSTRUMENTATION	
PROJECT NUMBER	10224999

WHISTLER

Whistler, BC

RESORT MUNICIPALITY OF WHISTLER
P280 PUMP STATION

2020

PROCESS PIPING PLAN AND SECTION

FILENAME 00M001.dwg

SCALE 1:30

SHEET **00M001**

C:\pwworking\canada01\d0141487\00M001.dwg, 00M001, 8/11/2021 6:00:58 PM, EHAN

WHISTLER

P280 CHLORINATION SYSTEM UPGRADES
DETAILED DESIGN

PREPARED BY:

PBX ENGINEERING

RECORD DRAWING

RECORD DRAWING NOTE:

THE SEAL AND SIGNATURE OF THE UNDERSIGNED ON THIS DRAWING CERTIFIES THAT THE DESIGN INFORMATION CONTAINED IN THESE DRAWINGS ACCURATELY REFLECTS THE ORIGINAL DESIGN AND THE MATERIAL DESIGN CHANGES MADE DURING CONSTRUCTION, THAT WERE BROUGHT TO THE UNDERSIGNED'S ATTENTION. THESE DRAWINGS ARE INTENDED TO INCORPORATE ADDENDA, CHANGE ORDERS AND OTHER MATERIAL DESIGN CHANGES, BUT NOT NECESSARILY ALL SITE INSTRUCTIONS.

THE UNDERSIGNED DOES NOT WARRANT OR GUARANTEE, NOR ACCEPT ANY RESPONSIBILITY FOR THE ACCURACY OR COMPLETENESS OF THE AS-CONSTRUCTED INFORMATION SUPPLIED BY OTHERS CONTAINED IN THESE DRAWINGS, BUT DOES, BY SEALING AND SIGNING, CERTIFY THAT THE AS-CONSTRUCTED INFORMATION, IF ACCURATE AND COMPLETE, PROVIDES AN AS-CONSTRUCTED SYSTEM WHICH SUBSTANTIALLY COMPLIES IN ALL MATERIAL RESPECTS WITH THE ORIGINAL DESIGN INTENT.

Rev.	DATE	ISSUE / REVISION DESCRIPTION	DESN	QC	QA
B	21OCT22	RECORD DRAWING	NI	AT	BW
A	20DEC16	ISSUED FOR CONSTRUCTION	NI	AT	BW
–	20OCT19	ISSUED FOR TENDER	NI	AT	BW

CLIENT: WHISTLER

PROJECT: P280 CHLORINATION SYSTEM UPGRADES

PBX ENGINEERING Ltd.
Suite 300 - 131 Water St.
Vancouver BC, V6B 4M3 Tel 604.408.7222
www.pbxeng.com

TITLE: TITLE PAGE

SCALE	PROJECT NUMBER	DRAWING NUMBER	REV.
N/A	20224	E01	B

P:\20224_RNOW_P280_Chlorination_System_Upgrades\01_Detailed_Design\Drawings\ACAD\E01; 22/10/2021 11:28 AM; MICHAEL TALADAR

DRAWING INDEX

ELECTRICAL DRAWINGS

DRAWING No.	REV.	DESCRIPTION
E01	B	TITLE PAGE
E02	B	DRAWING INDEX
E03	B	LEGENDS AND ABBREVIATIONS
E10	B	PLAN – CHLORINATION ROOM
E15	B	DETAILS – CHLORINATION SYSTEM PLC MODIFICATIONS
E16	B	DETAILS – HYPO TANK INTERCONNECTIONS

RECORD DRAWING

RECORD DRAWING NOTE:

THE SEAL AND SIGNATURE OF THE UNDERSIGNED ON THIS DRAWING CERTIFIES THAT THE DESIGN INFORMATION CONTAINED IN THESE DRAWINGS ACCURATELY REFLECTS THE ORIGINAL DESIGN AND THE MATERIAL DESIGN CHANGES MADE DURING CONSTRUCTION, THAT WERE BROUGHT TO THE UNDERSIGNED'S ATTENTION. THESE DRAWINGS ARE INTENDED TO INCORPORATE ADDENDA, CHANGE ORDERS AND OTHER MATERIAL DESIGN CHANGES, BUT NOT NECESSARILY ALL SITE INSTRUCTIONS.

THE UNDERSIGNED DOES NOT WARRANT OR GUARANTEE, NOR ACCEPT ANY RESPONSIBILITY FOR THE ACCURACY OR COMPLETENESS OF THE AS–CONSTRUCTED INFORMATION SUPPLIED BY OTHERS CONTAINED IN THESE DRAWINGS, BUT DOES, BY SEALING AND SIGNING, CERTIFY THAT THE AS–CONSTRUCTED INFORMATION, IF ACCURATE AND COMPLETE, PROVIDES AN AS–CONSTRUCTED SYSTEM WHICH SUBSTANTIALLY COMPLIES IN ALL MATERIAL RESPECTS WITH THE ORIGINAL DESIGN INTENT.

Rev.	DATE	ISSUE / REVISION DESCRIPTION	DESN	QC	QA
B	21OCT22	RECORD DRAWING	NI	AT	BW
A	20DEC16	ISSUED FOR CONSTRUCTION	NI	AT	BW
–	20OCT19	ISSUED FOR TENDER	NI	AT	BW

CLIENT

WHISTLER

PROJECT

P280 CHLORINATION SYSTEM UPGRADES

PBX ENGINEERING

PBX ENGINEERING Ltd.
Suite 300 - 131 Water St.
Vancouver BC, V6B 4M3 Tel 604.408.7222
www.pbxeng.com

TITLE

DRAWING INDEX

SCALE	PROJECT NUMBER	DRAWING NUMBER	REV.
N/A	20224	E02	B

P:\20224_RNOW_P280_Chlorination_System_Upgrades\01_Detailed_Design\Drawings\ACAD\E02; 22/10/2021 11:30 AM; MICHAEL TALADAR

SYMBOL LEGEND

SYMBOL	DESCRIPTION
•	CONDUIT STUB
✕	GROUND ELECTRODE/ROD
	GROUNDING SYSTEM EXTENSION TAIL
	DUPLEX RECEPTACLE 120V (GFCI)
$	SWITCH (LIGHTING)
M	MOTOR
S	STROBE
H	HORN
X.XkW	UNIT HEATER
D	INCANDESCENT OR H.I.D. LIGHT FIXTURES
R	INDICATOR LIGHT R=RED, A=AMBER, G–GREEN
TVSS	TRANSIENT VOLTAGE SURGE SUPPRESSOR
PEC	WALL–PACK LIGHT FIXTURE C/W PHOTOCELL
	GROUNDING
X	CONTACTOR/RELAY COIL
	FUSE
	POWER TRANSFORMER
XX	SUBMERSIBLE PUMP

SYMBOL LEGEND

SYMBOL	DESCRIPTION
	NORMAL OPEN CONTACT
	NORMAL CLOSED CONTACT
	CIRCUIT BREAKER
	PANELBOARD, CONTROL PANEL
	LED TUBE FIXTURE – 48"
JB	JUNCTION BOX
LIT XXX	ULTRASONIC LEVEL SENSOR
LE XXX	LEVEL FLOAT SWITCH HIGH LEVEL No. X
AIT–X	CHLORINE ANALYSER
T	THERMOSTAT
B	ALARM BUZZER
ETM	ELAPSED TIME METER
LT	ULTRASONIC LEVEL TRANSDUCER
	EXPLOSION PROOF EYS SEAL
	EXPLOSION PROOF VENTILATION FAN
	EXPLOSION PROOF DISCONNECT SWITCH

LINE TYPE LEGEND

LINE	DESCRIPTION
	120V CONDUIT/CABLE
	COMMUNICATIONS OR LOW VOLTAGE CONDUIT/CABLE
	347/600V CONDUIT/CABLE
	GROUNDING
	FIBRE OPTIC (RED)
	ETHERNET (PURPLE)
	PHONE LINE (GREEN)

ABBREVIATIONS:

ATS	AUTOMATIC TRANSFER SWITCH
AISB	ANALOG INTRINSICALLY SAFE BARRIER
BLWR	BLOWER FAN
C	COIL
CC	CONTROL CABINET
CEC	CANADIAN ELECTRICAL CODE, PART1, LATEST EDITION
CFL	COMPACT FLUORESCENT LAMP
CTRL	CONTROL
DET	DETAIL
EF	EXHAUST FAN
ETM	ELAPSED TIME METER
F	FUSE
FM	FLOW METER
FMC	FLEXIBLE METAL CONDUIT
GEN	GENERATOR
GFCI	GROUND FAULT CIRCUIT INTERRUPTER
GRD	GROUNDING
H	HOT/ENERGIZED
HO	HIGH OUTPUT
HOA	HAND–OFF–AUTO CONTROL
HP	HORSE POWER
ISR	INTRINSICALLY SAFE RELAY
LED	LIGHT EMITTING DIODE FIXTURE (LIGHT FIXTURE)
LTG	LIGHT/LIGHTING
MGB	MASTER GROUND BAR
N	NEUTRAL
NIC	NOT IN CONTRACT
OL	OVERLOAD PROTECTION
PEC	PHOTOELECTRIC CELL
PH, ø	PHASE
PLC	PROGRAMMABLE LOGIC CONTROLLER
PNL	PANEL
PT	PRESSURE TRANSMITTER
PWY	PUBLIC WORKS YARD
R	RELAY
RAC	RIGID ALUMINUM CONDUIT
REC	RECEPTACLES
SF	SUPPLY FAN
SP	SUMP PUMP
TVSS	TRANSIENT VOLTAGE SURGE SUPPRESSOR
UH	UNIT HEATER
VFD	VARIABLE FREQUENCY DRIVE
W	WIRE
XFMR	TRANSFORMER

RECORD DRAWING

RECORD DRAWING NOTE:

THE SEAL AND SIGNATURE OF THE UNDERSIGNED ON THIS DRAWING CERTIFIES THAT THE DESIGN INFORMATION CONTAINED IN THESE DRAWINGS ACCURATELY REFLECTS THE ORIGINAL DESIGN AND THE MATERIAL DESIGN CHANGES MADE DURING CONSTRUCTION, THAT WERE BROUGHT TO THE UNDERSIGNED'S ATTENTION. THESE DRAWINGS ARE INTENDED TO INCORPORATE ADDENDA, CHANGE ORDERS AND OTHER MATERIAL DESIGN CHANGES, BUT NOT NECESSARILY ALL SITE INSTRUCTIONS.

THE UNDERSIGNED DOES NOT WARRANT OR GUARANTEE, NOR ACCEPT ANY RESPONSIBILITY FOR THE ACCURACY OR COMPLETENESS OF THE AS–CONSTRUCTED INFORMATION SUPPLIED BY OTHERS CONTAINED IN THESE DRAWINGS, BUT DOES, BY SEALING AND SIGNING, CERTIFY THAT THE AS–CONSTRUCTED INFORMATION, IF ACCURATE AND COMPLETE, PROVIDES AN AS–CONSTRUCTED SYSTEM WHICH SUBSTANTIALLY COMPLIES IN ALL MATERIAL RESPECTS WITH THE ORIGINAL DESIGN INTENT.

Rev.	DATE	ISSUE / REVISION DESCRIPTION	DESN	QC	QA
B	21OCT22	RECORD DRAWING	NI	AT	BW
A	20DEC16	ISSUED FOR CONSTRUCTION	NI	AT	BW
–	20OCT19	ISSUED FOR TENDER	NI	AT	BW

CLIENT: WHISTLER

PROJECT: P280 CHLORINATION SYSTEM UPGRADES

PBX ENGINEERING
PBX ENGINEERING Ltd.
Suite 300 - 131 Water St.
Vancouver BC, V6B 4M3 Tel 604.408.7222
www.pbxeng.com

TITLE: LEGENDS AND ABBREVIATIONS

SCALE	PROJECT NUMBER	DRAWING NUMBER	REV.
N/A	20224	E03	B

P:\20224_RNOW_P280_Chlorination_System_Upgrades\01_Detailed_Design\Drawings\ACAD\E03, 22/10/2021 11:30 AM, MICHAEL TALADAR

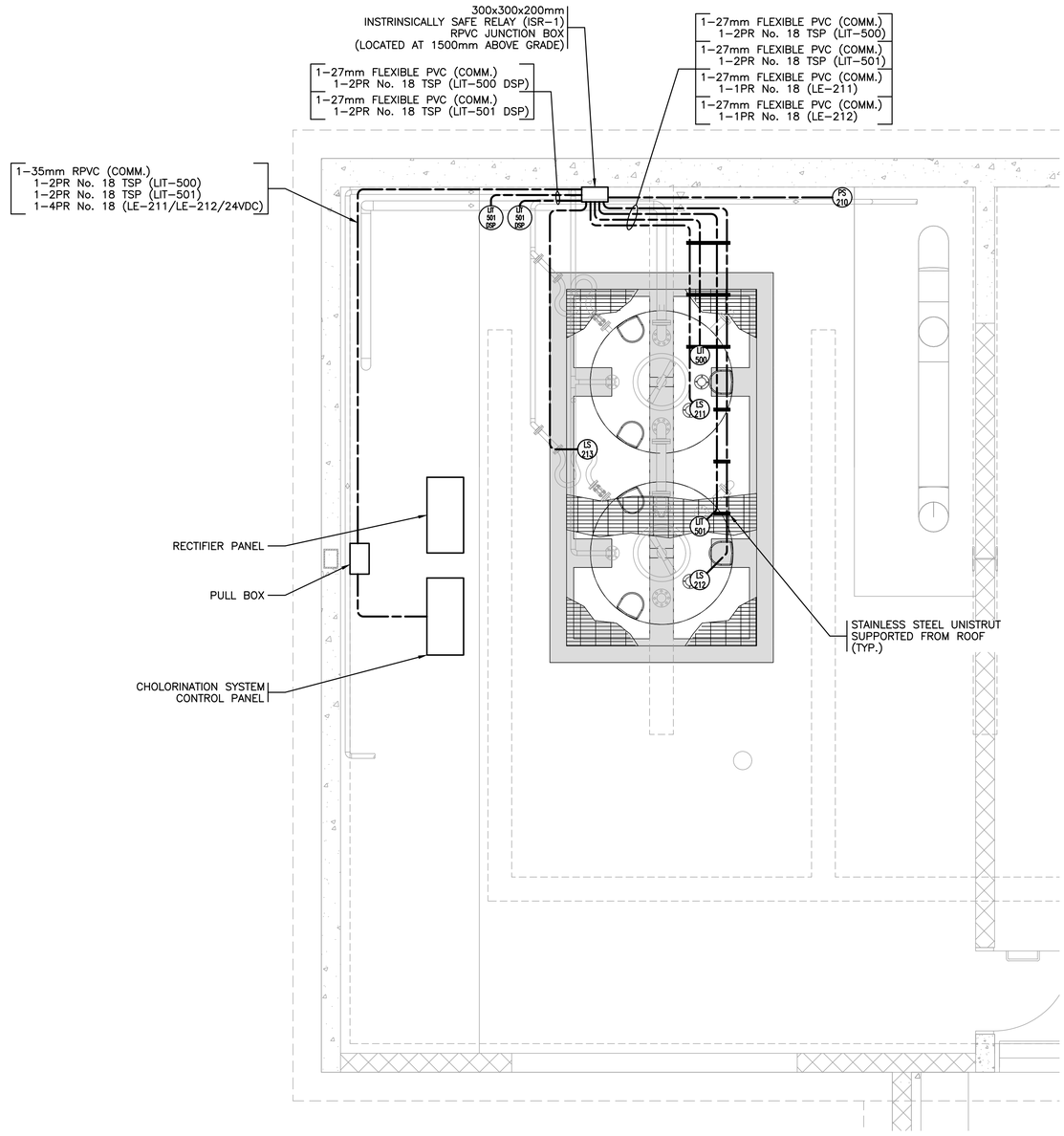

TANK CONFIGURATION

PLAN VIEW – CHLORINATION ROOM
N.T.S.

SYMBOL LEGEND

SYMBOL	DESCRIPTION	PART NUMBER
LIT 500	ULTRASONIC LEVEL TRANSMITTER	VEGA SON 61 – SN61.KFANHKNXX
LE 501	ULTRASONIC LEVEL TRANSMITTER	VEGA SON 61 – SN61.KFANHKNXX
LIT 500 DSP	TRANSMITTER DISPLAY	VEGA DIS 61 – SN61.KFKNB
LIT 501 DSP	TRANSMITTER DISPLAY	VEGA DIS 61 – SN61.KFKNB
LS 211	LEVEL SWITCH	FLYGT ENM10 FLOAT SWITCH
LS 212	LEVEL SWITCH	FLYGT ENM10 FLOAT SWITCH
LS 213	LEVEL SWITCH	FLYGT ENM10 FLOAT SWITCH
PS 210	PRESSURE SWITCH	DWYER 1950G

RECORD DRAWING

RECORD DRAWING NOTE:

THE SEAL AND SIGNATURE OF THE UNDERSIGNED ON THIS DRAWING CERTIFIES THAT THE DESIGN INFORMATION CONTAINED IN THESE DRAWINGS ACCURATELY REFLECTS THE ORIGINAL DESIGN AND THE MATERIAL DESIGN CHANGES MADE DURING CONSTRUCTION, THAT WERE BROUGHT TO THE UNDERSIGNED'S ATTENTION. THESE DRAWINGS ARE INTENDED TO INCORPORATE ADDENDA, CHANGE ORDERS AND OTHER MATERIAL DESIGN CHANGES, BUT NOT NECESSARILY ALL SITE INSTRUCTIONS.

THE UNDERSIGNED DOES NOT WARRANT OR GUARANTEE, NOR ACCEPT ANY RESPONSIBILITY FOR THE ACCURACY OR COMPLETENESS OF THE AS-CONSTRUCTED INFORMATION SUPPLIED BY OTHERS CONTAINED IN THESE DRAWINGS, BUT DOES, BY SEALING AND SIGNING, CERTIFY THAT THE AS-CONSTRUCTED INFORMATION, IF ACCURATE AND COMPLETE, PROVIDES AN AS-CONSTRUCTED SYSTEM WHICH SUBSTANTIALLY COMPLIES IN ALL MATERIAL RESPECTS WITH THE ORIGINAL DESIGN INTENT.

Rev.	DATE	ISSUE / REVISION DESCRIPTION	DESN	QC	QA
B	21OCT22	RECORD DRAWING	NI	AT	BW
A	20DEC16	ISSUED FOR CONSTRUCTION	NI	AT	BW
–	20OCT19	ISSUED FOR TENDER	NI	AT	BW

CLIENT
WHISTLER

PROJECT
P280 CHLORINATION SYSTEM UPGRADES

PBX ENGINEERING
PBX ENGINEERING Ltd.
Suite 300 - 131 Water St.
Vancouver BC, V6B 4M3 Tel 604.408.7222
www.pbxeng.com

TITLE
PLAN
CHLORINATION ROOM

SCALE	PROJECT NUMBER	DRAWING NUMBER	REV.
N/A	20224	E10	B

p:\20224 RWCW P280 Chlorination System Upgrades\01 Detailed Design\Drawings\ACAD\E10, 22/10/2021 11:31 AM, MICHAEL TALADAR

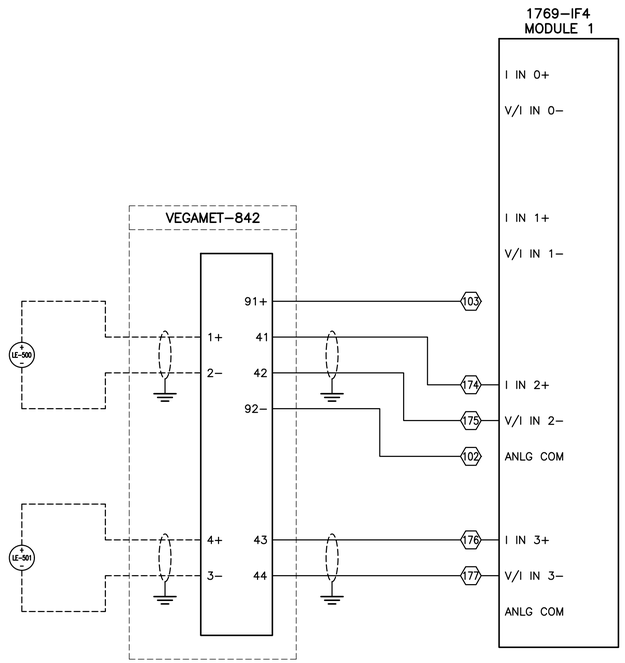

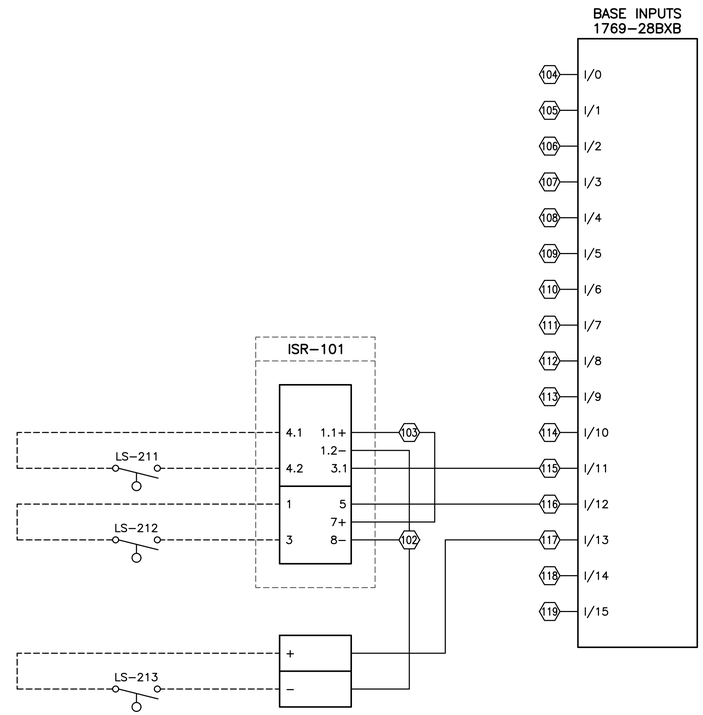

RECORD DRAWING

RECORD DRAWING NOTE:

THE SEAL AND SIGNATURE OF THE UNDERSIGNED ON THIS DRAWING CERTIFIES THAT THE DESIGN INFORMATION CONTAINED IN THESE DRAWINGS ACCURATELY REFLECTS THE ORIGINAL DESIGN AND THE MATERIAL DESIGN CHANGES MADE DURING CONSTRUCTION, THAT WERE BROUGHT TO THE UNDERSIGNED'S ATTENTION. THESE DRAWINGS ARE INTENDED TO INCORPORATE ADDENDA, CHANGE ORDERS AND OTHER MATERIAL DESIGN CHANGES, BUT NOT NECESSARILY ALL SITE INSTRUCTIONS.

THE UNDERSIGNED DOES NOT WARRANT OR GUARANTEE, NOR ACCEPT ANY RESPONSIBILITY FOR THE ACCURACY OR COMPLETENESS OF THE AS-CONSTRUCTED INFORMATION SUPPLIED BY OTHERS CONTAINED IN THESE DRAWINGS, BUT DOES, BY SEALING AND SIGNING, CERTIFY THAT THE AS-CONSTRUCTED INFORMATION, IF ACCURATE AND COMPLETE, PROVIDES AN AS-CONSTRUCTED SYSTEM WHICH SUBSTANTIALLY COMPLIES IN ALL MATERIAL RESPECTS WITH THE ORIGINAL DESIGN INTENT.

NOTES:

1. NOT ALL INPUTS AND OUTPUTS SHOWN. ONLY THOSE RELATING TO UPDATED SYSTEM IDENTIFIED IN DRAWINGS.

Rev.	DATE	ISSUE / REVISION DESCRIPTION	DESN	QC	QA
B	21OCT22	RECORD DRAWING	NI	AT	BW
A	20DEC16	ISSUED FOR CONSTRUCTION	NI	AT	BW
–	20OCT19	ISSUED FOR TENDER	NI	AT	BW

CLIENT: WHISTLER

PROJECT: P280 CHLORINATION SYSTEM UPGRADES

PBX ENGINEERING Ltd.
Suite 300 - 131 Water St.
Vancouver BC, V6B 4M3 Tel 604.408.7222
www.pbxeng.com

TITLE: DETAILS
CHLORINATION SYSTEM PLC MODIFICATIONS

SCALE	PROJECT NUMBER	DRAWING NUMBER	REV.
N/A	20224	E15	B

P:\20224_RNOW_P280_Chlorination_System_Upgrades\01_Detailed_Design\Drawings\ACAD\E15- 27/10/2021 11:31 AM: MICHAEL TALAGAS

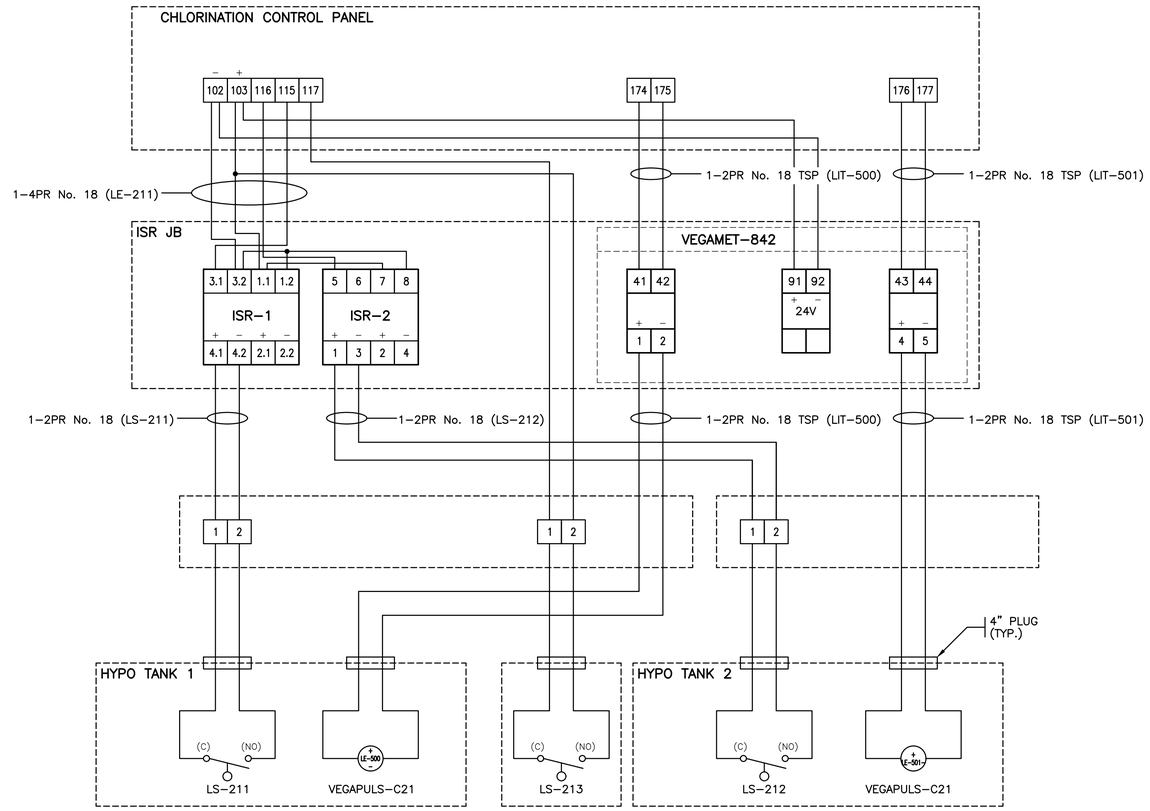

SYMBOL LEGEND		
SYMBOL	DESCRIPTION	PART NUMBER
ISR-1	INSTRINSICALLY SAFE RELAY	TURCK MK1-L22UP-EX0
AISB-1	ANALOG INTRINSICALLY SAFE BARRIER	TURCK MK33-LI-EX0
AISB-2	ANALOG INTRINSICALLY SAFE BARRIER	TURCK IM31-11EX-U

NOTES:

1. NOT ALL CONTROL ELEMENTS SHOWN. ONLY ELEMENTS INCLUDED IN SCOPE SHOWN FOR CLARITY.

RECORD DRAWING

RECORD DRAWING NOTE:

THE SEAL AND SIGNATURE OF THE UNDERSIGNED ON THIS DRAWING CERTIFIES THAT THE DESIGN INFORMATION CONTAINED IN THESE DRAWINGS ACCURATELY REFLECTS THE ORIGINAL DESIGN AND THE MATERIAL DESIGN CHANGES MADE DURING CONSTRUCTION, THAT WERE BROUGHT TO THE UNDERSIGNED'S ATTENTION. THESE DRAWINGS ARE INTENDED TO INCORPORATE ADDENDA, CHANGE ORDERS AND OTHER MATERIAL DESIGN CHANGES, BUT NOT NECESSARILY ALL SITE INSTRUCTIONS.

THE UNDERSIGNED DOES NOT WARRANT OR GUARANTEE, NOR ACCEPT ANY RESPONSIBILITY FOR THE ACCURACY OR COMPLETENESS OF THE AS-CONSTRUCTED INFORMATION SUPPLIED BY OTHERS CONTAINED IN THESE DRAWINGS, BUT DOES, BY SEALING AND SIGNING, CERTIFY THAT THE AS-CONSTRUCTED INFORMATION, IF ACCURATE AND COMPLETE, PROVIDES AN AS-CONSTRUCTED SYSTEM WHICH SUBSTANTIALLY COMPLIES IN ALL MATERIAL RESPECTS WITH THE ORIGINAL DESIGN INTENT.

Rev.	DATE	ISSUE / REVISION DESCRIPTION	DESN	QC	QA
B	21OCT22	RECORD DRAWING	NI	AT	BW
A	20DEC16	ISSUED FOR CONSTRUCTION	NI	AT	BW
–	20OCT19	ISSUED FOR TENDER	NI	AT	BW

CLIENT: WHISTLER

PROJECT: P280 CHLORINATION SYSTEM UPGRADES

PBX ENGINEERING
PBX ENGINEERING Ltd.
Suite 300 - 131 Water St.
Vancouver BC, V6B 4M3 Tel 604.408.7222
www.pbxeng.com

TITLE: DETAILS HYPO TANK INTERCONNECTIONS

SCALE	PROJECT NUMBER	DRAWING NUMBER	REV.
N/A	20224	E16	B

P:\20224_RNOW_P280_Chlorination_System_Upgrades\01_Detailed_Design\Drawings\ACAD\E16, 22/10/2021 11:31 AM, MICHAEL TALADAR