WHISTLER

RESORT MUNICIPALITY OF WHISTLER

21 MILE CREEK
UV DISINFECTION FACILITY

CONTRACT No. 179.75.3

Dayton & Knight Ltd.
CONSULTING ENGINEERS
#210-889 HARBOURSIDE DRIVE, NORTH VANCOUVER, B.C.
TEL. (604) 990-4800 WWW.DAYTON-KNIGHT.COM
FAX (604) 990-4805

RECORD DRAWINGS

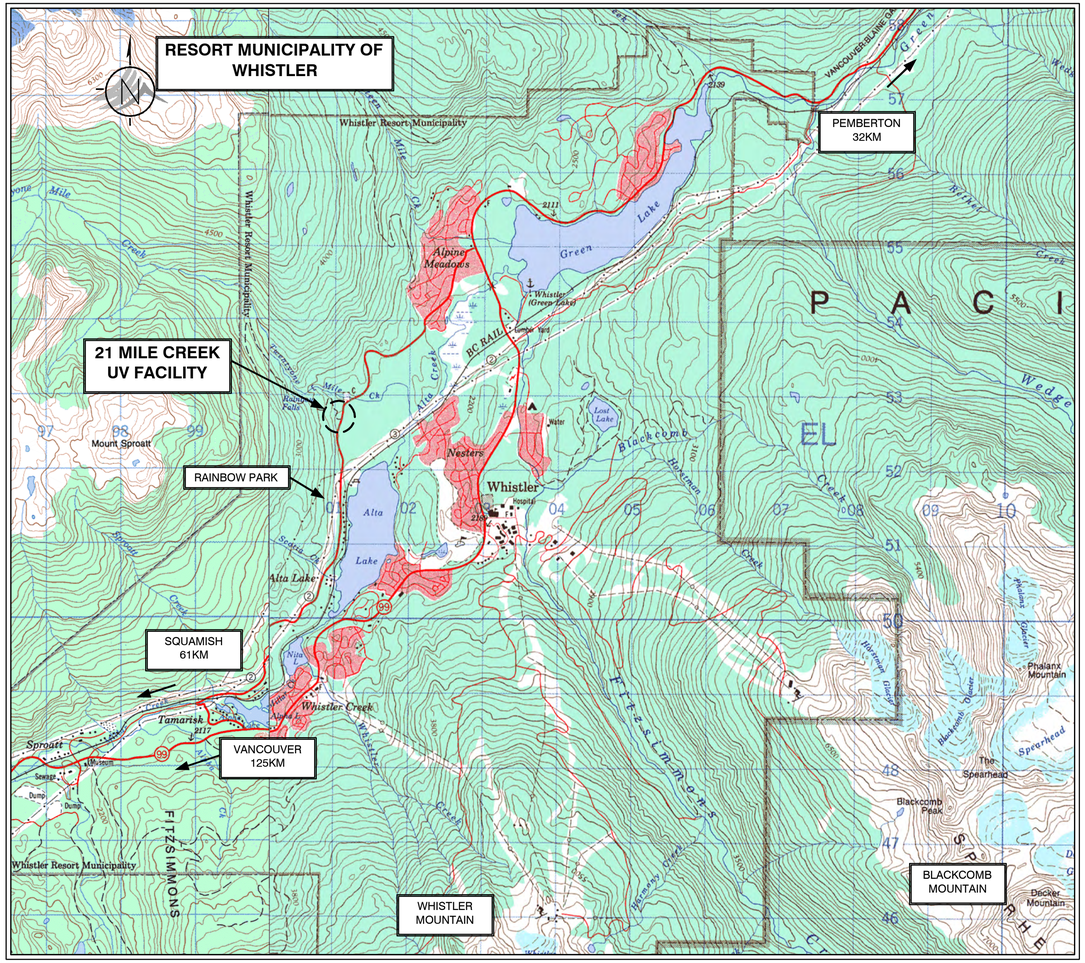

KEY PLAN
NTS

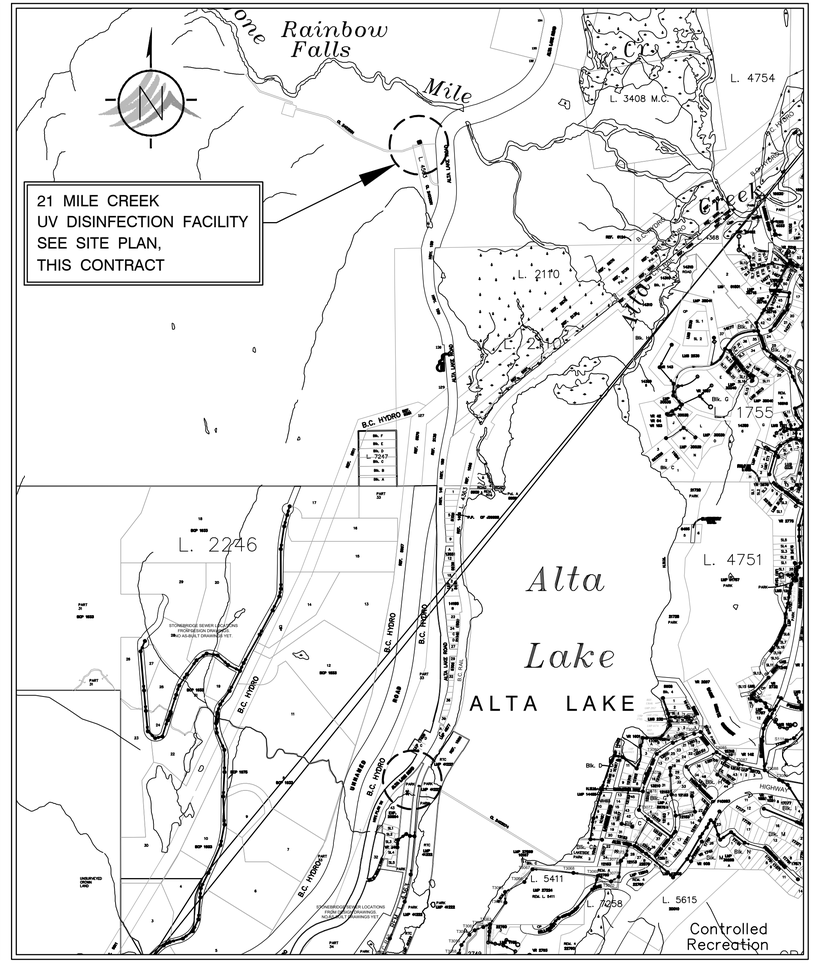

0 500 1000
SCALE IN METRES

AREA PLAN
1:10000

INDEX TO DRAWINGS (TOTAL DWGS. =)

SHEET No.	TITLE
	GENERAL
G1	KEY PLAN – AREA PLAN – INDEX TO DRAWINGS
G2	OVERALL SITE LAYOUT
G3	SITE LAYOUT
G4	SITE GRADING
G5	ROAD PROFILES AND SECTIONS
G6	SITE SECTIONS
G7	SITE SECTIONS
G8	OUTSIDE PIPING
G9	PIPE PROFILES
G10	GENERAL DETAILS
G11	GENERAL DETAILS
	PROCESS AND INSTRUMENTATION
P1	P&ID STANDARD TAGS AND ABBREVIATIONS
P2	P&ID STANDARD SYMBOLS, EQUIPMENT, VALVES AND INSTRUMENTATION
P3	PROCESS AND INSTRUMENTATION
	ARCHITECTURAL
A0–A4	ARCHITECTURAL
	STRUCTURAL
S1	GENERAL CONSTRUCTION NOTES
S2	GENERAL STRUCTURAL DETAILS
S3	GENERAL STRUCTURAL AND MASONRY DETAILS
S4	STRUCTURAL – FLOOR PLAN @ EL. 679.50
S5	STRUCTURAL – ROOF PLAN
S6	STRUCTURAL – SECTIONS
S7	REINFORCING – SECTIONS
S8	STRUCTURAL – STEEL CONNECTION DETAILS
	MECHANICAL
M1	MECHANICAL – PLAN
M2	MECHANICAL – SECTION
M3	MECHANICAL – SECTIONS
M4	MECHANICAL – DETAILS
	HEATING AND VENTILATING
HV1	HEATING AND VENTILATING – PLAN, LEGEND AND MISCELLANEOUS DETAILS
	ELECTRICAL
E1	ELECTRICAL SITE LAYOUT
E2	SINGLE LINE DIAGRAM AND MCC LAYOUT
E3	ELECTRICAL PLC I/O WIRING DIAGRAM
E4	POWER AND CONTROL LAYOUT
E5	ELECTRICAL AND LIGHTING LAYOUT
E6	DISTRIBUTION PANEL SCHEDULE AND MISCELLANEOUS DETAILS

GENERAL NOTES:

1. ALL ELEVATIONS ARE GEODETIC AND BASED ON THE SURVEY MONUMENT GCM# 150359.
2. ALL UNDERGROUND UTILITIES INCLUDING WATER, STORM, GAS, CABLE, TELEPHONE AND ELECTRICAL AS SHOWN ON THESE PLANS ARE FOR INFORMATION ONLY. NO RESPONSIBILITY IS IMPLIED OR ASSUMED BY THE RMOW OR DAYTON AND KNIGHT LTD. AS TO THEIR LOCATION OR OMISSIONS.
3. THE CONTRACTOR SHALL NOTIFY THE VARIOUS UTILITY AGENCIES FOR ON–SITE INFORMATION AS TO THE ACTUAL LOCATION PRIOR TO THE START OF CONSTRUCTION.
4. THE CONTRACTOR SHALL BE RESPONSIBLE FOR TRAFFIC CONTROL IN ACCORDANCE WITH THE LATEST EDITION OF TRANSPORTATION ASSOCIATION OF CANADA.
5. THE CONTRACTOR SHALL BE RESPONSIBLE FOR SITE SAFETY AND SHALL BE THE "PRIME CONTRACTOR" AS DEFINED BY THE WORKERS COMPENSATION ACT AND REGULATIONS.
6. THE CONTRACTOR SHALL COMPLY WITH ALL ENVIRONMENTAL REQUIREMENTS AS DEFINED BY THE CONTRACT DOCUMENTS AND IN ACCORDANCE WITH THE GUIDELINES FOR LAND DEVELOPMENT WORK WITHIN BRITISH COLUMBIA, ISSUED BY THE MINISTRY OF ENVIRONMENT.
7. ALL WATER VALVES SHALL ONLY BE OPERATED BY THE RMOW, THIS INCLUDES BOTH SUPPLY AND GRAVITY DISCHARGE PIPES. THE CONTRACTOR SHALL GIVE 48 HOURS NOTICE TO THE RMOW FOR REQUESTS TO OPERATE VALVES.
8. THE CONTRACTOR SHALL OBTAIN ALL NECESSARY PERMITS PRIOR TO CONSTRUCTION.
9. ALL CONNECTIONS TO THE RMOW WATER SYSTEM SHALL BE DONE IN THE PRESENCE OF A RMOW WATERWORKS STAFF. THE CONTRACTOR SHALL PROVIDE A MINIMUM 48 HOURS NOTICE TO THE RMOW PRIOR TO INSTALLING ANY CONNECTIONS.
10. ALL DISTURBED AREAS SHALL BE SPREAD WITH TOPSOIL FOR PLANTING BY RMOW.

"These Record Drawings have been prepared based on information provided by the Contractor and others. Dayton & Knight Ltd. has not verified the accuracy or completeness of the information provided to them and does not warrant the accuracy or completeness of these Record Drawings. Users of these Record Drawings assume all risk of loss resulting from their use."

RESORT MUNICIPALITY OF WHISTLER
21 MILE CREEK UV DISINFECTION FACILITY
CONTRACT No. 179.75.3

PLOT: FULL 1:1 HALF 1:2

REVISIONS	ISSUE	DATE	DRAWN	CHK'D	APP'D	DESCRIPTION	ISSUE	DATE	DRAWN	CHK'D	APP'D	DESCRIPTION
	A	SEP29/08	KS	WB	WB	ISSUED FOR TENDER						
	B	NOV10/08	KS	WB	WG	ISSUED FOR CONSTRUCTION						
	C	JUN04/10	AD	WB	WB	RECORD DRAWING						

AutoCAD DRAWING

DESIGNED WB
DRAWN KS
CHECKED WB

Dayton & Knight Ltd.
CONSULTING ENGINEERS
#210-889 HARBOURSIDE DR., NORTH VANCOUVER, B.C. V7P 3S1
TEL.: (604) 990-4800 FAX: (604) 990-4805 www.dayton-knight.com

RESORT MUNICIPALITY OF WHISTLER
21 MILE CREEK UV DISINFECTION FACILITY
KEY PLAN – AREA PLAN – INDEX TO DRAWINGS

SCALE: AS SHOWN
DRAWING No. 179.75.3
SHEET No. G1 ISSUE C

FILE: P:\Recdwg\WHISTLER\179-75-3\GENERAL\179-75-3_G1.dwg Tab: G1 11-01-17 richard

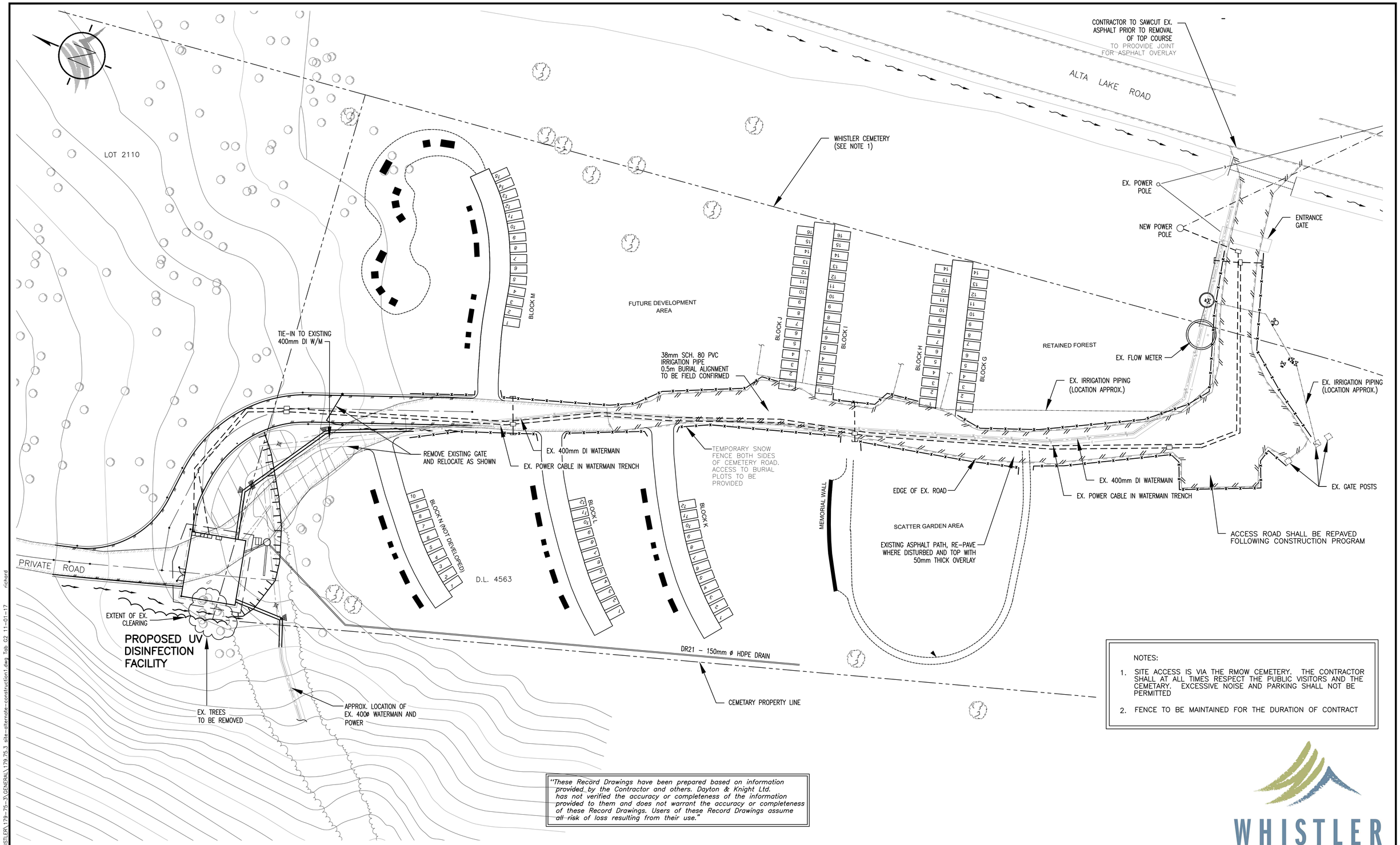

NOTES:

1. SITE ACCESS IS VIA THE RMOW CEMETERY. THE CONTRACTOR SHALL AT ALL TIMES RESPECT THE PUBLIC VISITORS AND THE CEMETARY. EXCESSIVE NOISE AND PARKING SHALL NOT BE PERMITTED
2. FENCE TO BE MAINTAINED FOR THE DURATION OF CONTRACT

"These Record Drawings have been prepared based on information provided by the Contractor and others. Dayton & Knight Ltd. has not verified the accuracy or completeness of the information provided to them and does not warrant the accuracy or completeness of these Record Drawings. Users of these Record Drawings assume all risk of loss resulting from their use."

WHISTLER

PLOT: FULL 1:1 HALF 1:2

FILE: P:\Recdwgs\WHISTLER\179-75-3\GENERAL\179.75.3_site-alternate-construction1.dwg tab G2 11-01-17 richard

AutoCAD DRAWING

REVISIONS

ISSUE	DATE	DRAWN	CHK'D	APP'D	DESCRIPTION
A	29/9/08	PW	WB	WB	ISSUED FOR TENDER
B	OCT14/08	PW	WB	WB	1 ADDENDUM No.1
C	NOV10/08	PW	WB	WB	ISSUED FOR CONSTRUCTION
D	JUN03/10	AD	WB	WB	RECORD DRAWING

DESIGNED WB, PW
DRAWN KE, JE
CHECKED WB

Dayton & Knight Ltd.
CONSULTING ENGINEERS
#210-889 HARBOURSIDE DR., NORTH VANCOUVER, B.C. V7P 3S1
TEL.: (604) 990-4800 FAX: (604) 990-4805 www.dayton-knight.com

RESORT MUNICIPALITY OF WHISTLER
21 MILE CREEK UV DISENFECTION FACILITY
OVERALL SITE LAYOUT

SCALE: 1:250
DRAWING No. 179.075.300
SHEET No. G2 ISSUE D

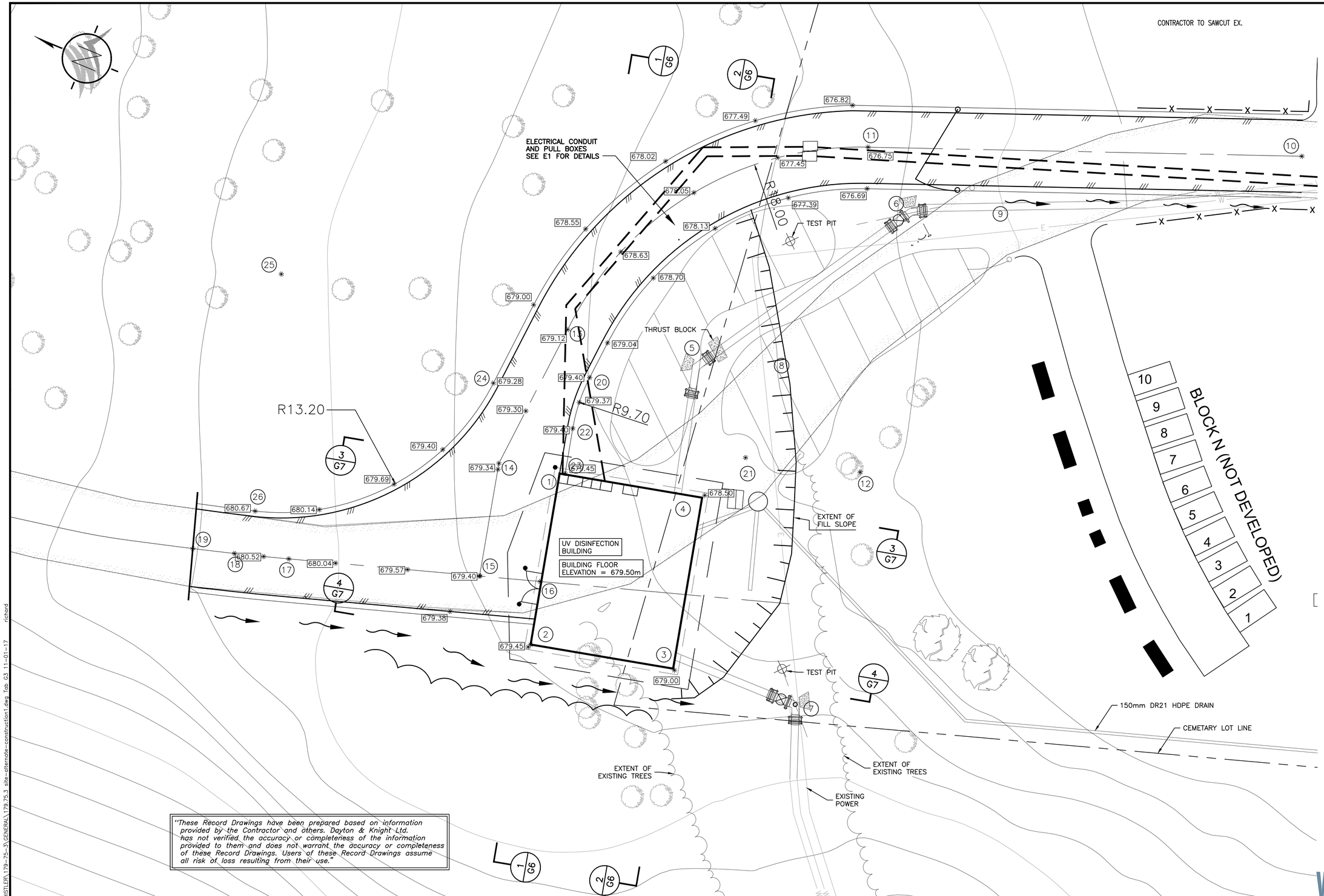

LAYOUT COORDINATES		
No.	NORTHING	EASTING
1	5552998.514	500888.444
2	5552996.981	500878.956
3	5552989.085	500880.243
4	5552990.616	500889.720
5	5552992.173	500898.485
6	5552983.312	500908.083
7	5552981.449	500877.991
8	5552988.780	500896.281
9	5552980.616	500909.368
10	5552965.285	500918.315
11	5552988.178	500911.053
12	5552982.805	500893.892
13	5553000.661	500896.138
14	5553001.885	500887.907
15	5553000.880	500881.645
16	5552997.546	500882.454
17	5553011.178	500879.138
18	5553014.126	500878.452
19	5553016.393	500877.966
20	5552998.650	500894.011
21	5552989.054	500892.592
22	5552998.630	500891.045
23	5552998.218	500888.429
24	5553003.597	500892.002
25	5553016.655	500893.932
26	5553013.798	500881.045

"These Record Drawings have been prepared based on information provided by the Contractor and others. Dayton & Knight Ltd. has not verified the accuracy or completeness of the information provided to them and does not warrant the accuracy or completeness of these Record Drawings. Users of these Record Drawings assume all risk of loss resulting from their use."

WHISTLER

PLOT: FULL 1:1 HALF 1:2

FILE: P:\Recdwgs\WHISTLER\179-75-3\GENERAL\179.75.3_site-alternate-construction1.dwg Tab: G3 11-01-17 richard

AutoCAD DRAWING

REVISIONS

ISSUE	DATE	DRAWN	CHK'D	APP'D	DESCRIPTION	ISSUE	DATE	DRAWN	CHK'D	APP'D	DESCRIPTION
A	29/9/08	PW	WB	WB	ISSUED FOR TENDER	D	JUN03/10	AD	WB	WB	RECORD DRAWING
B	OCT14/08	PW	WB	WB	1 ADDENDUM No.1						
C	NOV10/08	PW	WB	WB	ISSUED FOR CONSTRUCTION						

DESIGNED WB
DRAWN KE, JE
CHECKED WB

Dayton & Knight Ltd.
CONSULTING ENGINEERS
#210-889 HARBOURSIDE DR., NORTH VANCOUVER, B.C. V7P 3S1
TEL.: (604) 990-4800 FAX: (604) 990-4805 www.dayton-knight.com

RESORT MUNICIPALITY OF WHISTLER
21 MILE CREEK UV DISENFECTION FACILITY
SITE LAYOUT

SCALE: 1:100 (UNLESS NOTED)
DRAWING No. 179.075.300
SHEET No. G3 ISSUE D

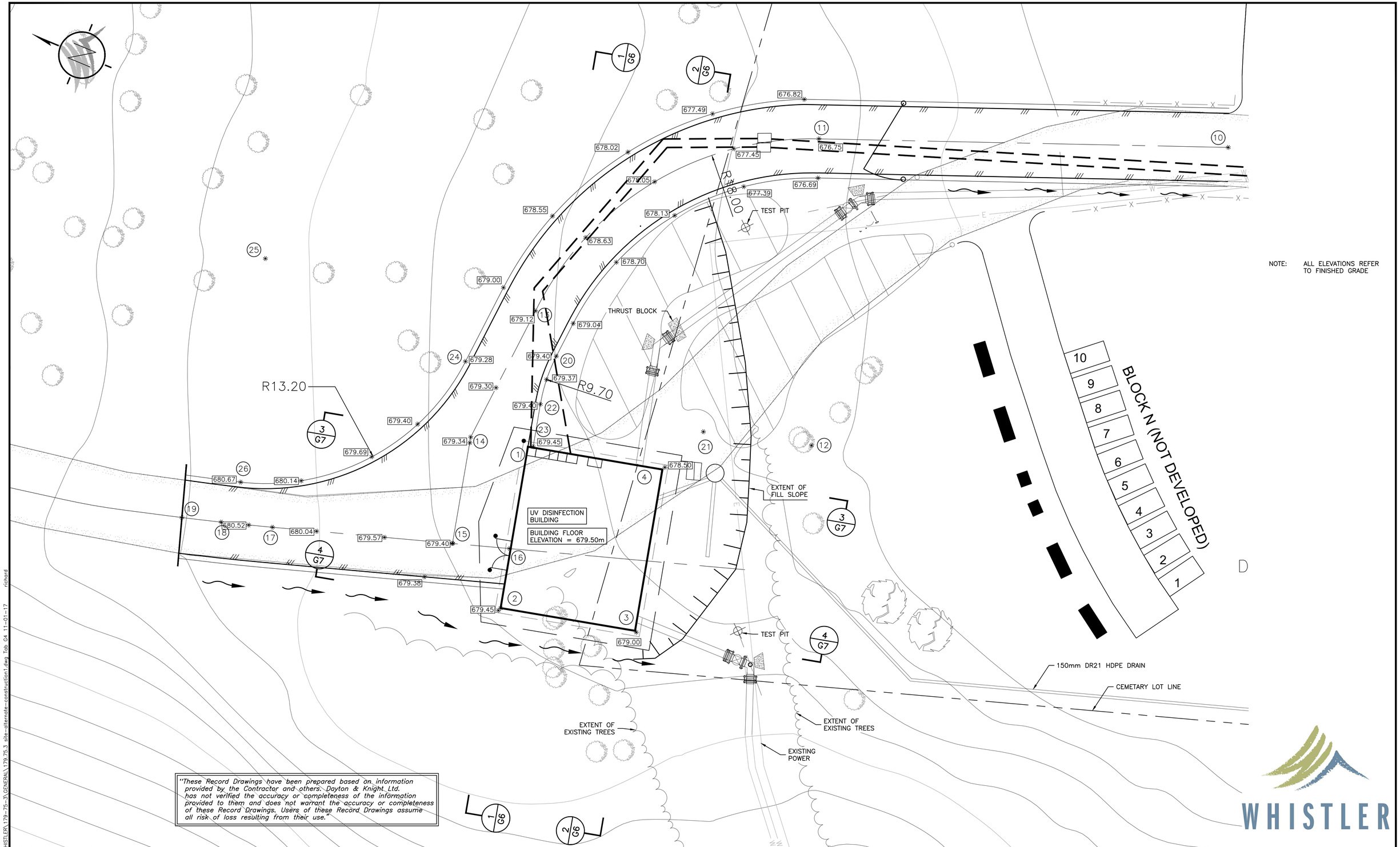

NOTE: ALL ELEVATIONS REFER TO FINISHED GRADE

"These Record Drawings have been prepared based on information provided by the Contractor and others. Dayton & Knight Ltd. has not verified the accuracy or completeness of the information provided to them and does not warrant the accuracy or completeness of these Record Drawings. Users of these Record Drawings assume all risk of loss resulting from their use."

WHISTLER

PLOT: FULL 1:1 HALF 1:2

FILE: P:\Recdwgs\WHISTLER\179-75-3\GENERAL\179.75.3 site-alternate-construction1.dwg Tab G4 11-01-17 richard

AutoCAD DRAWING

REVISIONS	ISSUE	DATE	DRAWN	CHK'D	APP'D	DESCRIPTION	ISSUE	DATE	DRAWN	CHK'D	APP'D	DESCRIPTION
	A	29/9/08	PW	WB	WB	ISSUED FOR TENDER	D	JUN03/10	AD	WB	WB	RECORD DRAWING
	B	OCT14/08	PW	WB	WB	1 ADDENDUM No.1						
	C	NOV10/08	PW	WB	WB	ISSUED FOR CONSTRUCTION						

DESIGNED WB
DRAWN JE
CHECKED WB

Dayton & Knight Ltd.
CONSULTING ENGINEERS
#210-889 HARBOURSIDE DR., NORTH VANCOUVER, B.C. V7P 3S1
TEL.: (604) 990-4800 FAX: (604) 990-4805 www.dayton-knight.com

RESORT MUNICIPALITY OF WHISTLER
21 MILE CREEK UV DISENFECTION FACILITY
SITE GRADING

SCALE: 1:100 (UNLESS NOTED)
DRAWING No. 179.075.300
SHEET No. G4 ISSUE D

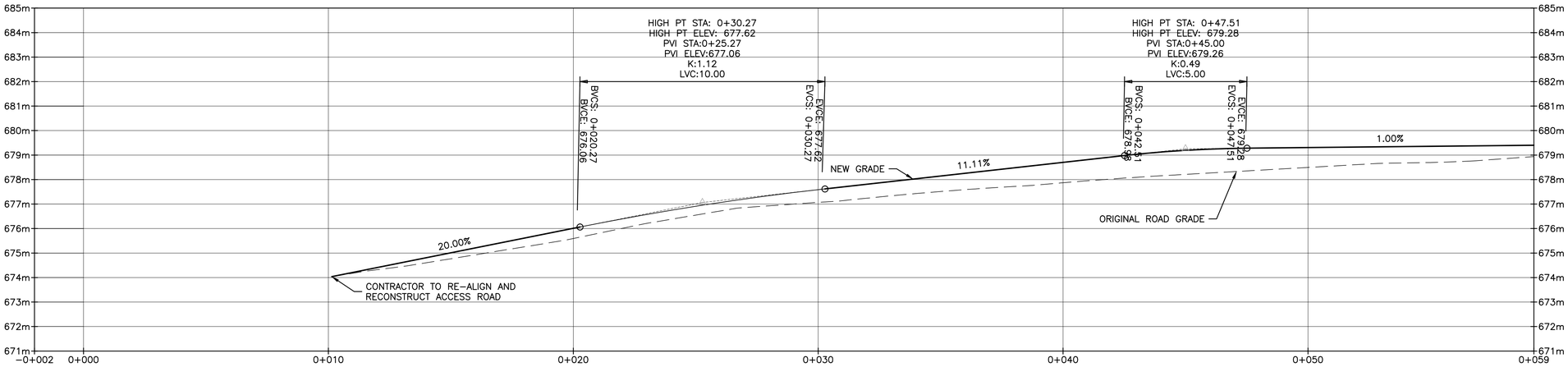

ACCESS ROAD PROFILE

SCALE: H 1: 100 V 1:100

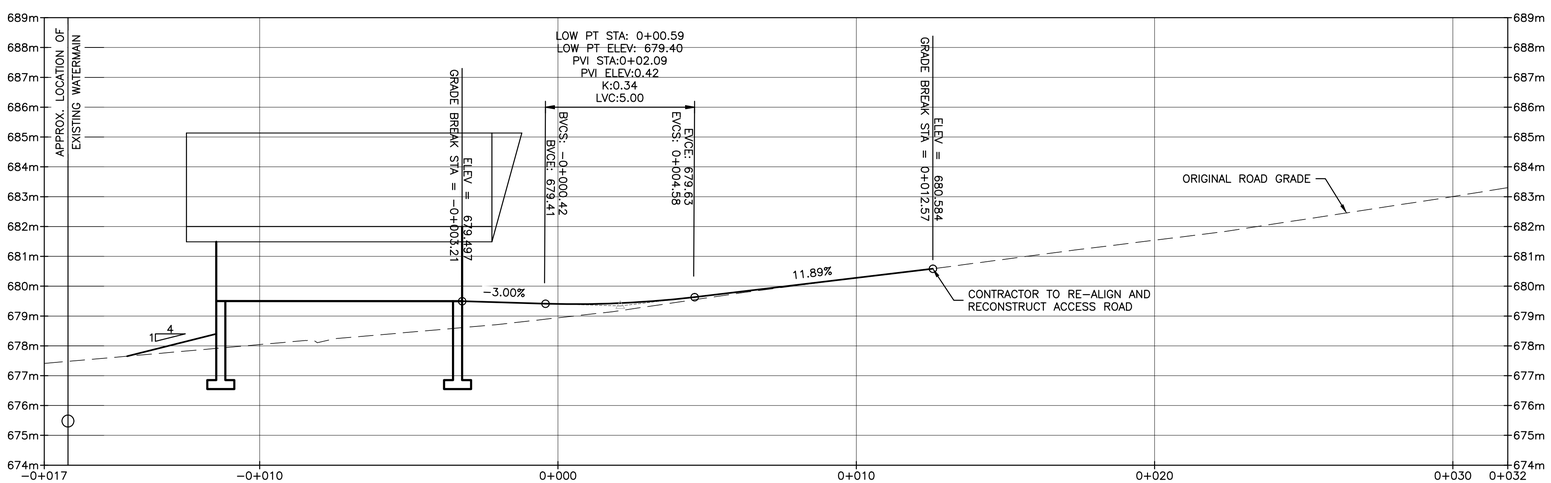

CONTINUING PRIVATE ROAD PROFILE

SCALE: H 1: 100 V 1:100

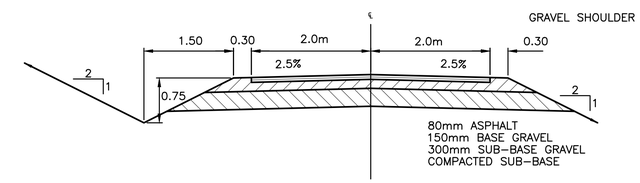

TYPICAL NEW ROAD CROSS SECTION

SCALE: H 1: 50 V 1:50

"These Record Drawings have been prepared based on information provided by the Contractor and others. Dayton & Knight Ltd. has not verified the accuracy or completeness of the information provided to them and does not warrant the accuracy or completeness of these Record Drawings. Users of these Record Drawings assume all risk of loss resulting from their use."

WHISTLER

PLOT: FULL 1:1 HALF 1:2

AutoCAD DRAWING

REVISIONS	ISSUE	DATE	DRAWN	CHK'D	APP'D	DESCRIPTION	ISSUE	DATE	DRAWN	CHK'D	APP'D	DESCRIPTION
	A	29/9/08	PW	WB	WB	ISSUED FOR TENDER	D	JUN03/10	AD	WB	WB	RECORD DRAWING
	B	OCT14/08	PW	WB	WB	1 ADDENDUM No.1						
	C	NOV10/08	PW	WB	WB	ISSUED FOR CONSTRUCTION						

DESIGNED WB
DRAWN JE
CHECKED WB

Dayton & Knight Ltd.
CONSULTING ENGINEERS
#210-889 HARBOURSIDE DR., NORTH VANCOUVER, B.C. V7P 3S1
TEL.: (604) 990-4800 FAX: (604) 990-4805 www.dayton-knight.com

RESORT MUNICIPALITY OF WHISTLER
21 MILE CREEK UV DISINFECTION FACILITY
ROAD PROFILES & SECTIONS

SCALE: 1:100 (UNLESS NOTED)
DRAWING No. 179.075.300
SHEET No. G5 ISSUE D

FILE: P:\Recdwgs\WHISTLER\179-75-3\GENERAL\179.75.3_site-alternate-construction1.dwg Tab: G5 11-01-17 richard

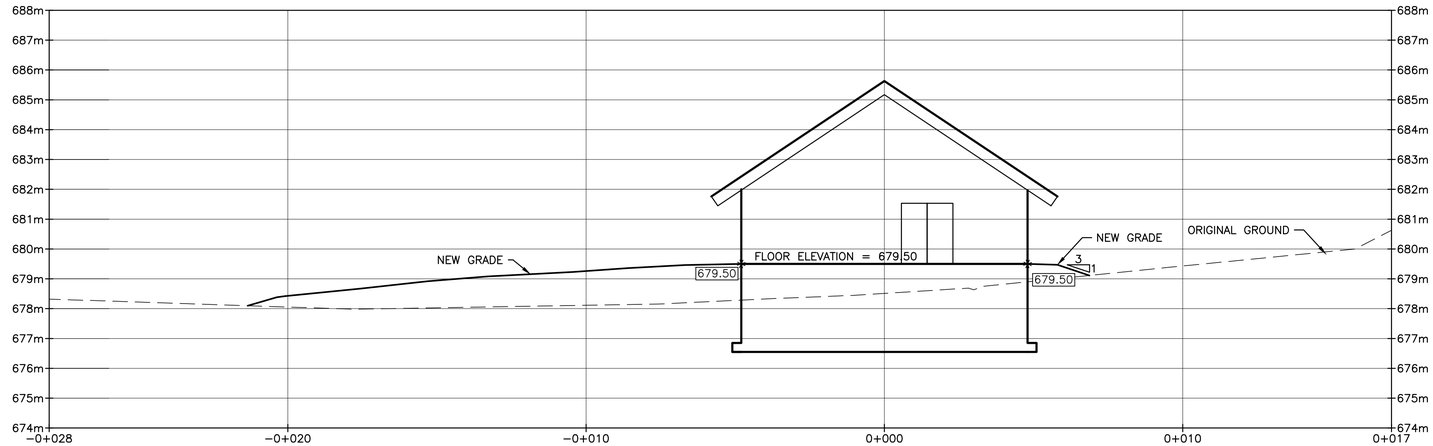

SECTION 1 / G3

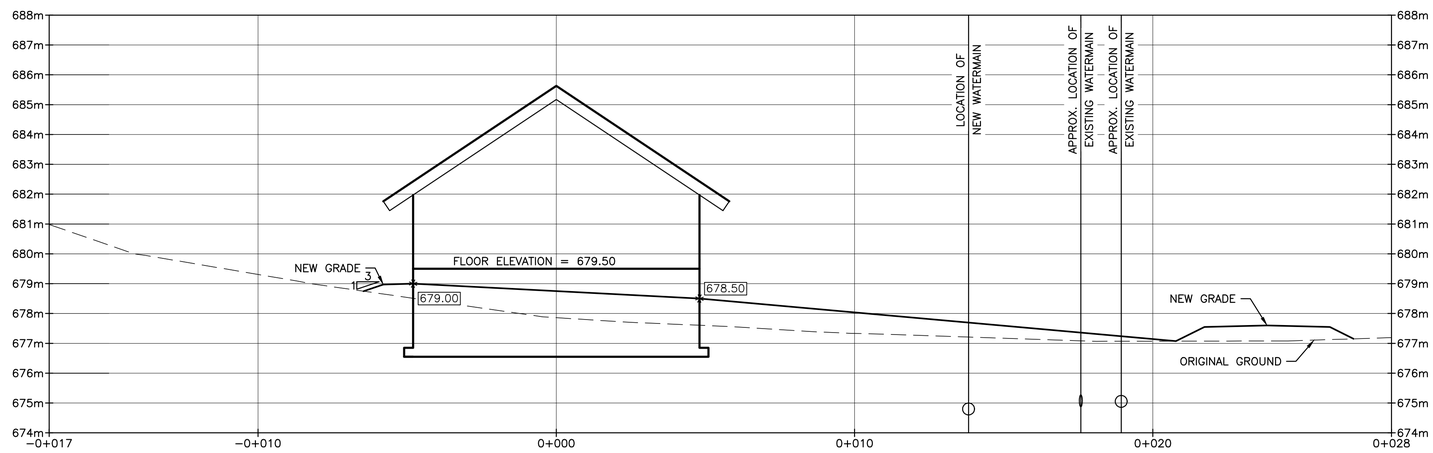

SECTION 2 / G3

"These Record Drawings have been prepared based on information provided by the Contractor and others. Dayton & Knight Ltd. has not verified the accuracy or completeness of the information provided to them and does not warrant the accuracy or completeness of these Record Drawings. Users of these Record Drawings assume all risk of loss resulting from their use."

WHISTLER

PLOT: FULL 1:1 HALF 1:2

AutoCAD DRAWING

REVISIONS

ISSUE	DATE	DRAWN	CHK'D	APP'D	DESCRIPTION	ISSUE	DATE	DRAWN	CHK'D	APP'D	DESCRIPTION
A	29/9/08	PW	WB	WB	ISSUED FOR TENDER	D	JUN03/10	AD	WB	WB	RECORD DRAWING
B	OCT14/08	PW	WB	WB	1 ADDENDUM No.1						
C	NOV10/08	PW	WB	WB	ISSUED FOR CONSTRUCTION						

DESIGNED WB
DRAWN JE
CHECKED WB

Dayton & Knight Ltd.
CONSULTING ENGINEERS
#210-889 HARBOURSIDE DR., NORTH VANCOUVER, B.C. V7P 3S1
TEL.: (604) 990-4800 FAX: (604) 990-4805 www.dayton-knight.com

RESORT MUNICIPALITY OF WHISTLER
21 MILE CREEK UV DISINFECTION FACILITY
SITE SECTIONS

SCALE: 1:100 (UNLESS NOTED)
DRAWING No. 179.075.300
SHEET No. G6 ISSUE D

FILE: P:\Recdwgs\WHISTLER\179-75-3\GENERAL\179.75.3 site-alternate-construction1.dwg Tab: G6 11-01-17 richard

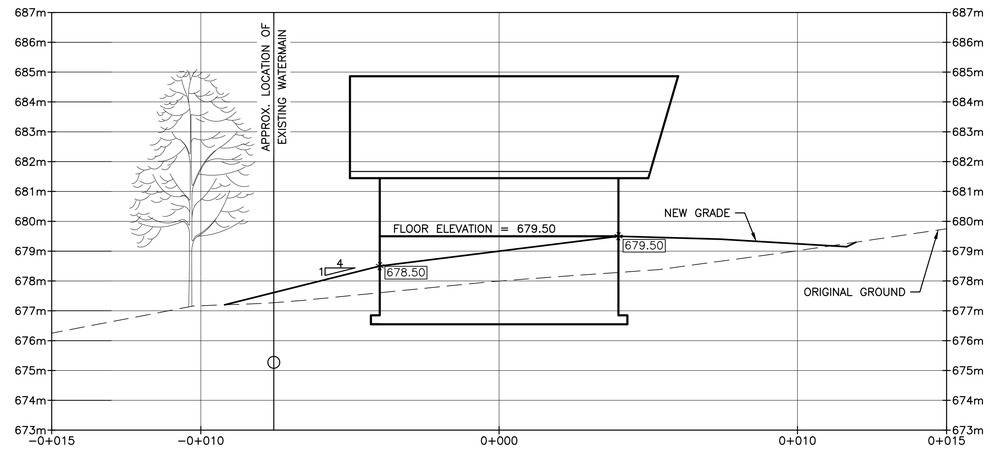

SECTION 3 / G2

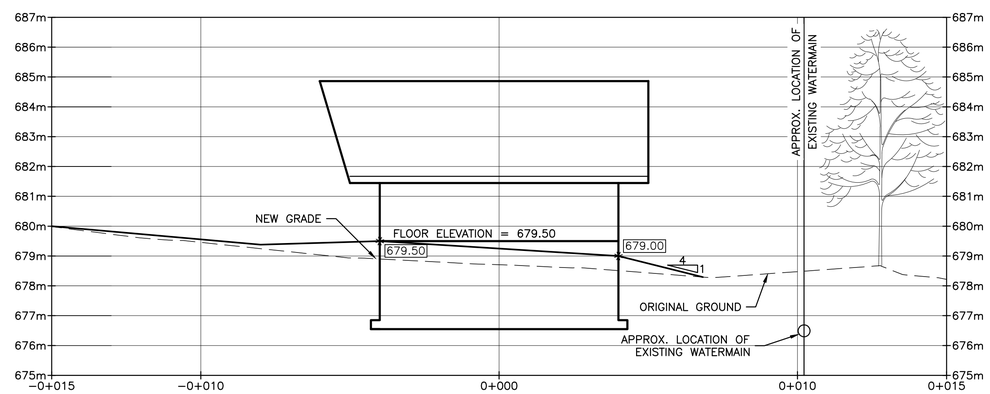

SECTION 4 / G2

"These Record Drawings have been prepared based on information provided by the Contractor and others. Dayton & Knight Ltd. has not verified the accuracy or completeness of the information provided to them and does not warrant the accuracy or completeness of these Record Drawings. Users of these Record Drawings assume all risk of loss resulting from their use."

WHISTLER

PLOT: FULL 1:1 HALF 1:2

AutoCAD DRAWING

REVISIONS

ISSUE	DATE	DRAWN	CHK'D	APP'D	DESCRIPTION	ISSUE	DATE	DRAWN	CHK'D	APP'D	DESCRIPTION
A	29/9/08	PW	WB	WB	ISSUED FOR TENDER	D	JUN03/10	AD	WB	WB	RECORD DRAWING
B	OCT14/08	PW	WB	WB	1 ADDENDUM No.1						
C	NOV10/08	PW	WB	WB	ISSUED FOR CONSTRUCTION						

DESIGNED WB
DRAWN JE
CHECKED WB

Dayton & Knight Ltd.
CONSULTING ENGINEERS
#210-889 HARBOURSIDE DR., NORTH VANCOUVER, B.C. V7P 3S1
TEL.: (604) 990-4800 FAX: (604) 990-4805 www.dayton-knight.com

RESORT MUNICIPALITY OF WHISTER
21 MILE UV DISINFECTION FACILITY
SITE SECTIONS

SCALE: 1:100 (UNLESS NOTED)
DRAWING No. 179.075.300
SHEET No. G7 ISSUE D

FILE: P:\Recdwgs\WHISTLER\179-75-3\GENERAL\179.75.3 site-alternate-construction1.dwg Tab G7 11-01-17 richard

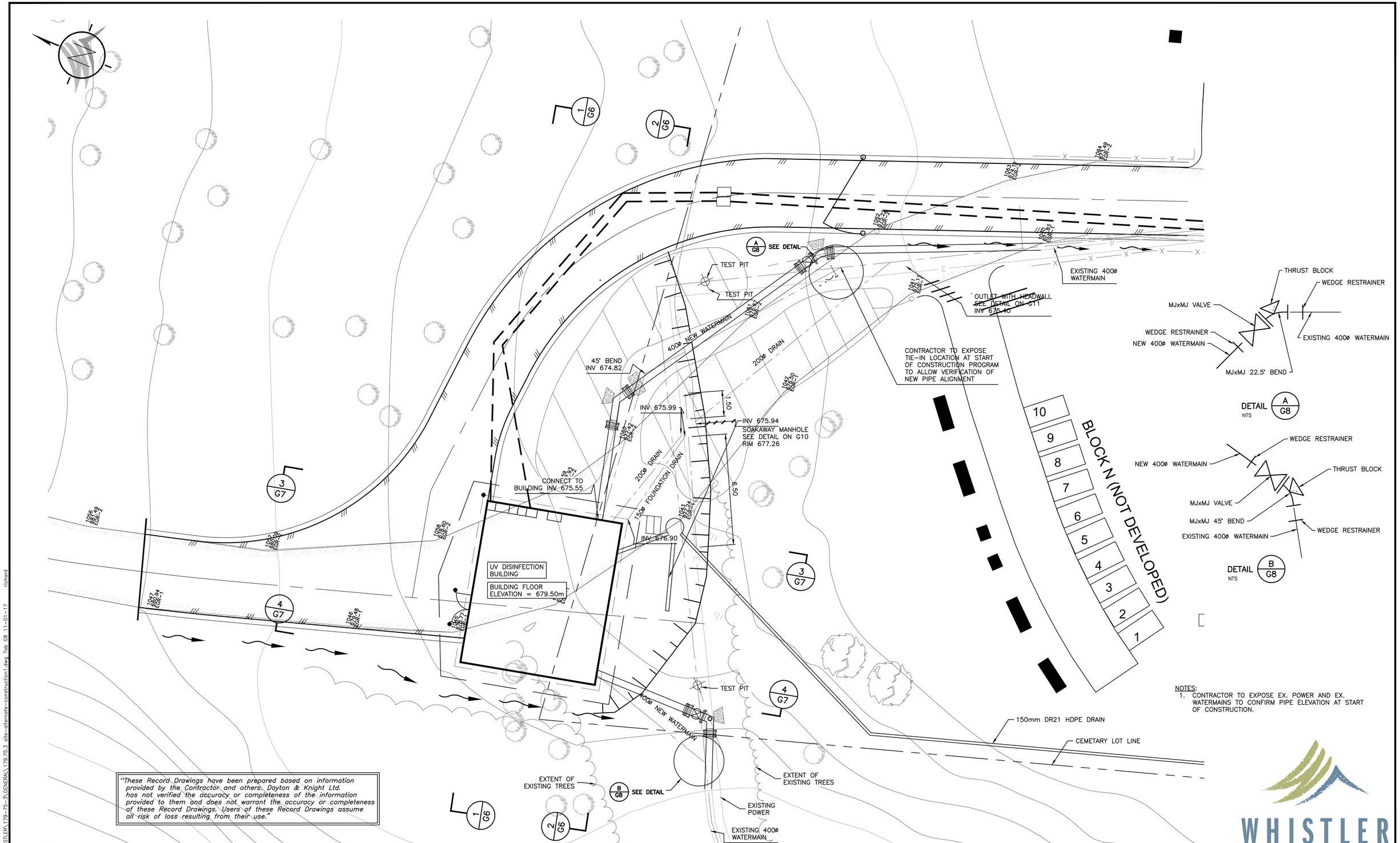

NOTES:
1. CONTRACTOR TO EXPOSE EX. POWER AND EX. WATERMAINS TO CONFIRM PIPE ELEVATION AT START OF CONSTRUCTION.

"These Record Drawings have been prepared based on information provided by the Contractor and others. Dayton & Knight Ltd. has not verified the accuracy or completeness of the information provided to them and does not warrant the accuracy or completeness of these Record Drawings. Users of these Record Drawings assume all risk of loss resulting from their use."

WHISTLER

PLOT: FULL 1:1 HALF 1:2

FILE: P:\Recdwgs\WHISTLER\179-75-3\GENERAL\179.75.3_site-alternate-construction1.dwg Tab: G8 11-01-17 richard

AutoCAD DRAWING

REVISIONS

ISSUE	DATE	DRAWN	CHK'D	APP'D	DESCRIPTION	ISSUE	DATE	DRAWN	CHK'D	APP'D	DESCRIPTION
A	29/9/08	PW	WB	WB	ISSUED FOR TENDER	D	JUN03/10	AD	WB	WB	RECORD DRAWING
B	OCT14/08	PW	WB	WB	1 ADDENDUM No.1						
C	NOV10/08	PW	WB	WB	ISSUED FOR CONSTRUCTION						

DESIGNED BW
DRAWN JE
CHECKED BW

Dayton & Knight Ltd.
CONSULTING ENGINEERS
#210-889 HARBOURSIDE DR., NORTH VANCOUVER, B.C. V7P 3S1
TEL.: (604) 990-4800 FAX: (604) 990-4805 www.dayton-knight.com

RESORT MUNICIPALITY OF WHISTLER
21 MILE CREEK UV DISINFECTION FACILITY
OUTSIDE PIPING

SCALE: 1:100 (UNLESS NOTED)
DRAWING No. 179.075.300
SHEET No. G8 ISSUE D

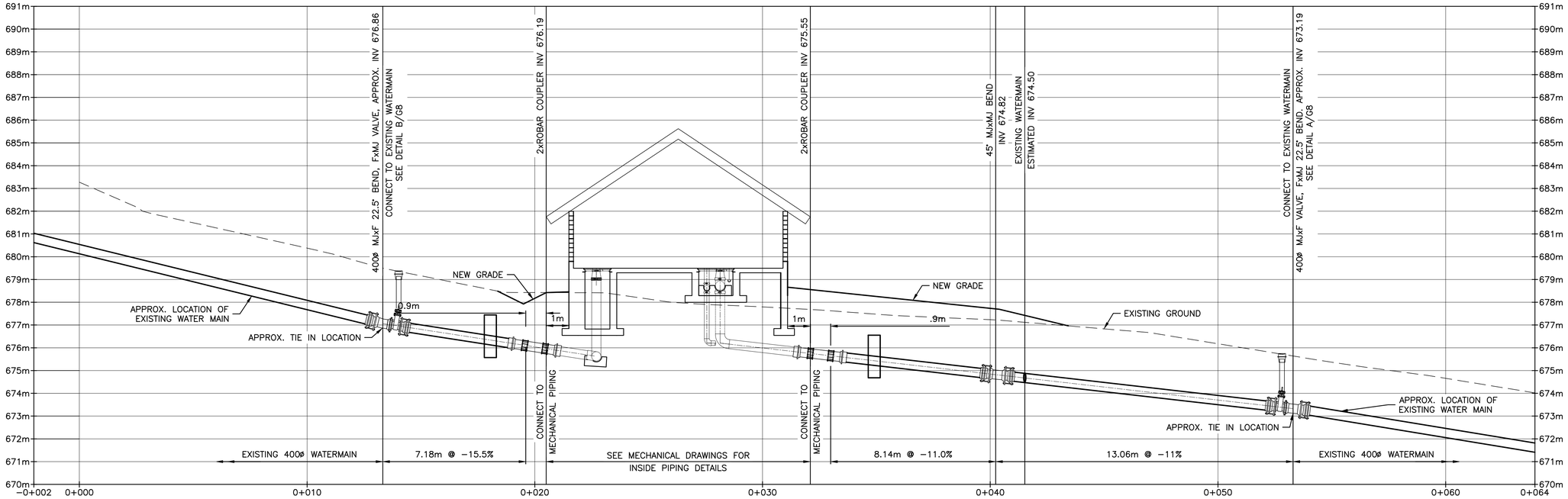

SCALE: H 1:100 V 1:100

PROFILE – 400ø NEW WATERMAIN

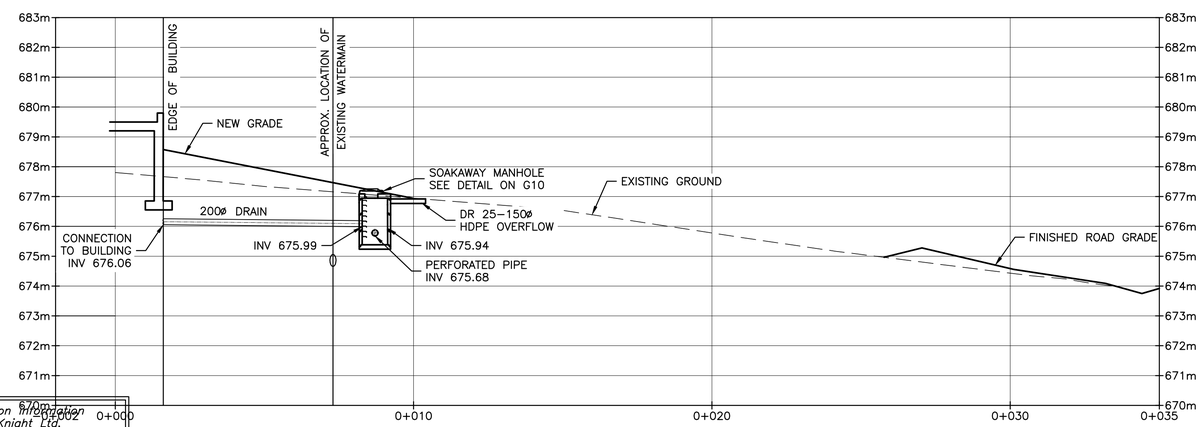

SCALE: H 1:100 V 1:100

PROFILE – 200ø NEW DRAIN

"These Record Drawings have been prepared based on information provided by the Contractor and others. Dayton & Knight Ltd. has not verified the accuracy or completeness of the information provided to them and does not warrant the accuracy or completeness of these Record Drawings. Users of these Record Drawings assume all risk of loss resulting from their use."

WHISTLER

PLOT: FULL 1:1 HALF 1:2

FILE: P:\Recdwgs\WHISTLER\179-75-3\GENERAL\179.75.3 site-alternate-construction1.dwg Tab G9 11-01-17 richard

AutoCAD DRAWING

REVISIONS	ISSUE	DATE	DRAWN	CHK'D	APP'D	DESCRIPTION	ISSUE	DATE	DRAWN	CHK'D	APP'D	DESCRIPTION
	A	29/9/08	PW	WB	WB	ISSUED FOR TENDER						
	B	NOV10/08	PW	WB	WB	ISSUED FOR CONSTRUCTION						
	C	JUN03/10	AD	WB	WB	RECORD DRAWING						

DESIGNED WB
DRAWN JE
CHECKED WB

Dayton & Knight Ltd.
CONSULTING ENGINEERS
#210-889 HARBOURSIDE DR., NORTH VANCOUVER, B.C. V7P 3S1
TEL.: (604) 990-4800 FAX: (604) 990-4805 www.dayton-knight.com

RESORT MUNICIPALITY OF WHISTLER
21 MILE CREEK UV DISINFECTION FACILITY
PIPE PROFILES

SCALE: 1:100 (UNLESS NOTED)
DRAWING No. 179.075.300
SHEET No. G9 ISSUE C

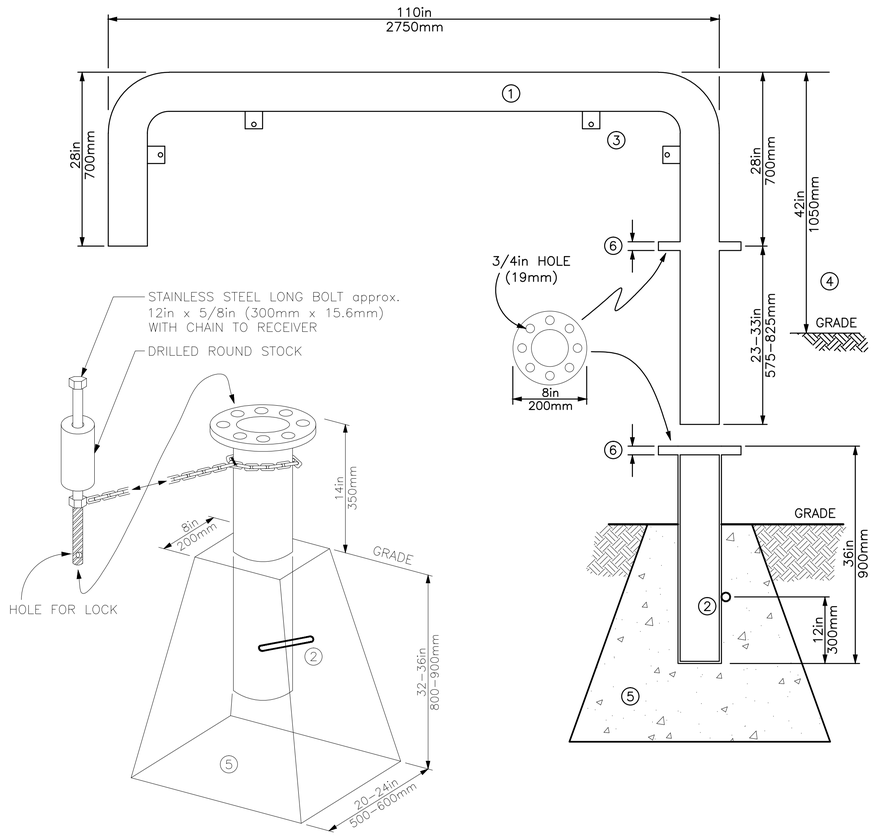

NOTES:

1. RAILING: SCHEDULE 40 4in O.D. (100mm) w/PIPE FLANGE POWDER COATED – "SAFETY YELLOW".
2. RECEPTACLE: SCHEDULE 40 4in I.D. (100mm) w/PIPE FLANGE POWDER COATED – "SAFETY YELLOW". PRIMER COATED REBAR OR SLIP STOP WELDED TO SIDE.
3. SIGN MOUNTING TABS: 1/4in x 2in x 1in with 3/8 HOLE (6.3mm x 50mm x 25mm with 9.4mm HOLE). SIGN: 3/4 in. (19mm) PLYWOOD BACKED, ALUMINUM, REFLECTIVE SIGNS ON EACH BARRIER. RMOW TO PROVIDE WORDING AS REQUIRED.
4. INSTALL 42in (1050mm) TO ASPHALT SURFACE.
5. INSTALLATION OF PRECAST CONCRETE RECEPTACLE TO BE ON COMPACTED BASE WITH COMPACTED BACKFILL.
6. GATE FLANGE & RECEPTACLE FLANGE TO MATCH.

GATE DETAIL (EXISTING GATE TO BE RELOCATED BY CONTRACTOR)

NTS

"These Record Drawings have been prepared based on information provided by the Contractor and others. Dayton & Knight Ltd. has not verified the accuracy or completeness of the information provided to them and does not warrant the accuracy or completeness of these Record Drawings. Users of these Record Drawings assume all risk of loss resulting from their use."

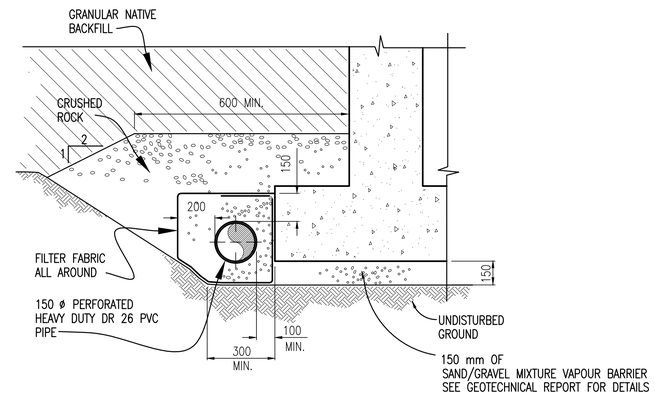

TYPICAL FOUNDATION DRAIN DETAIL

NTS

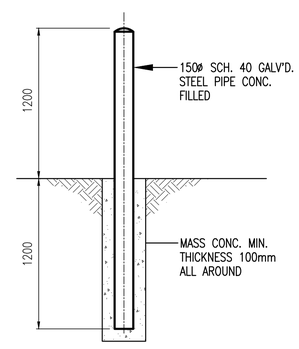

BOLLARD DETAIL

NTS

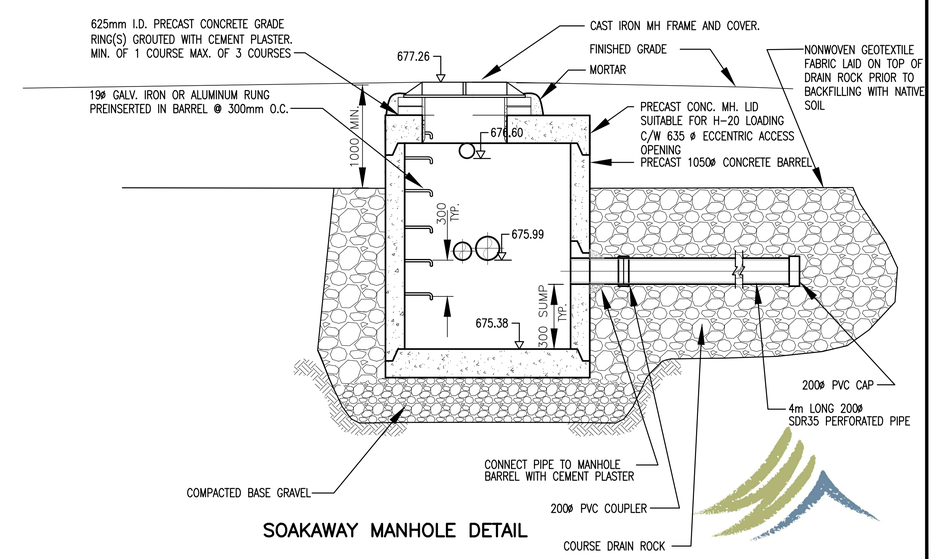

SOAKAWAY MANHOLE DETAIL

WHISTLER

PLOT: FULL 1:1 HALF 1:2

FILE: P:\Redwgs\WHISTLER\179-75-3\GENERAL\179.75.3 site-alternate-construction1.dwg Tab G10 11-01-17 richard

AutoCAD DRAWING

REVISIONS	ISSUE	DATE	DRAWN	CHK'D	APP'D	DESCRIPTION	ISSUE	DATE	DRAWN	CHK'D	APP'D	DESCRIPTION
	A	29/9/08	PW	WB	WB	ISSUED FOR TENDER	D	JUN03/10	AD	WB	WB	RECORD DRAWING
	B	OCT14/08	PW	WB	WB	1 ADDENDUM No.1						
	C	NOV10/08	PW	WB	WB	ISSUED FOR CONSTRUCTION						

DESIGNED WB
DRAWN JE
CHECKED WB

Dayton & Knight Ltd.
CONSULTING ENGINEERS
#210-889 HARBOURSIDE DR., NORTH VANCOUVER, B.C. V7P 3S1
TEL.: (604) 990-4800 FAX: (604) 990-4805 www.dayton-knight.com

RESORT MUNICIPALITY OF WHISTLER
21 MILE CREEK UV DISINFECTION FACILITY
GENERAL DETAILS

SCALE: AS SHOWN
DRAWING No. 179.075.300
SHEET No. G10 ISSUE D

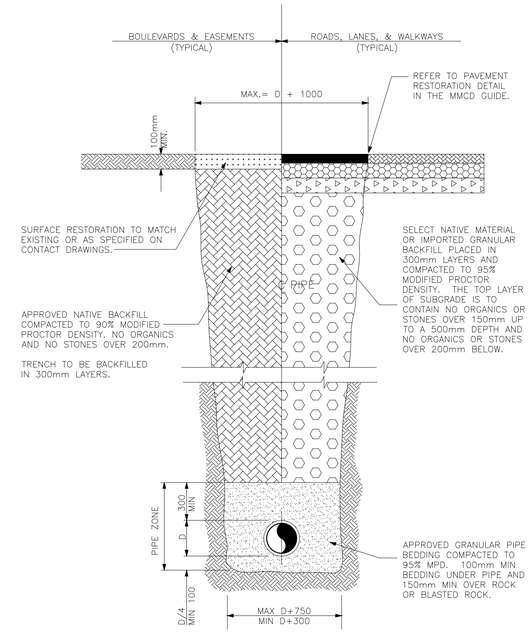

NOTES:

1. "D" = OUTSIDE DIAMETER OF THE PIPE AT ITS LARGEST SECTION.
2. TRENCHING TO COMPLY WITH ALL REQUIREMENTS OF THE WCB.

TYPICAL TRENCH SECTION

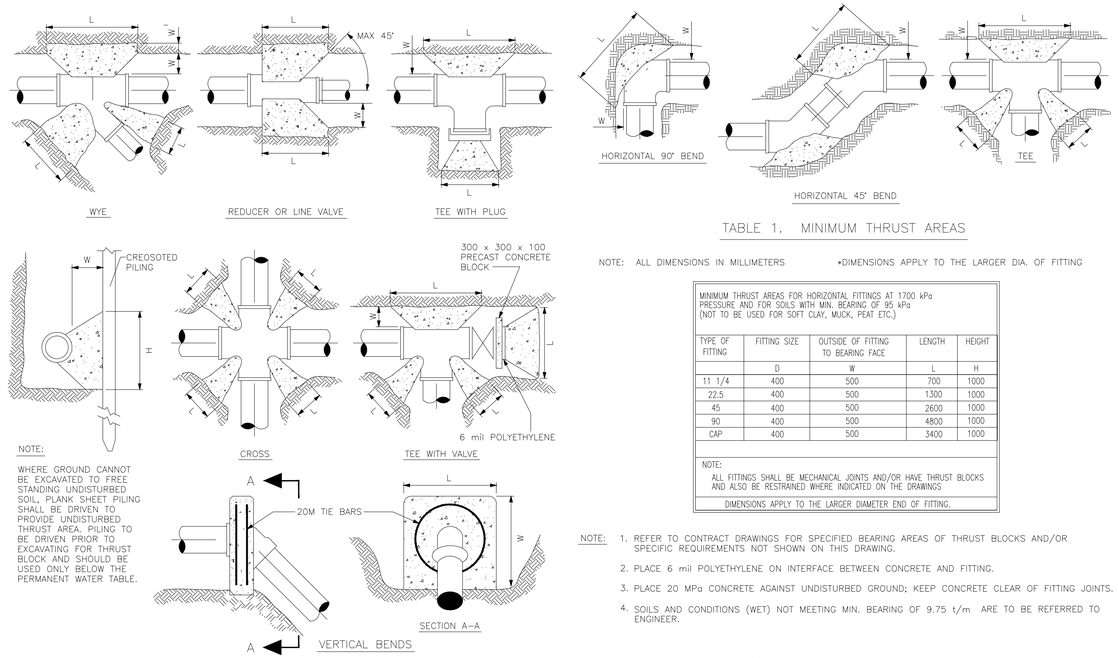

TABLE 1. MINIMUM THRUST AREAS

NOTE: ALL DIMENSIONS IN MILLIMETERS •DIMENSIONS APPLY TO THE LARGER DIA. OF FITTING

MINIMUM THRUST AREAS FOR HORIZONTAL FITTINGS AT 1700 kPa PRESSURE AND FOR SOILS WITH MIN. BEARING OF 95 kPa (NOT TO BE USED FOR SOFT CLAY, MUCK, PEAT ETC.)

TYPE OF FITTING	FITTING SIZE	OUTSIDE OF FITTING TO BEARING FACE	LENGTH	HEIGHT
	D	W	L	H
11 1/4	400	500	700	1000
22.5	400	500	1300	1000
45	400	500	2600	1000
90	400	500	4800	1000
CAP	400	500	3400	1000

NOTE:
ALL FITTINGS SHALL BE MECHANICAL JOINTS AND/OR HAVE THRUST BLOCKS AND ALSO BE RESTRAINED WHERE INDICATED ON THE DRAWINGS

DIMENSIONS APPLY TO THE LARGER DIAMETER END OF FITTING.

NOTE:

1. REFER TO CONTRACT DRAWINGS FOR SPECIFIED BEARING AREAS OF THRUST BLOCKS AND/OR SPECIFIC REQUIREMENTS NOT SHOWN ON THIS DRAWING.
2. PLACE 6 mil POLYETHYLENE ON INTERFACE BETWEEN CONCRETE AND FITTING.
3. PLACE 20 MPa CONCRETE AGAINST UNDISTURBED GROUND; KEEP CONCRETE CLEAR OF FITTING JOINTS.
4. SOILS AND CONDITIONS (WET) NOT MEETING MIN. BEARING OF 9.75 t/m ARE TO BE REFERRED TO ENGINEER.

THRUST BLOCK DETAILS

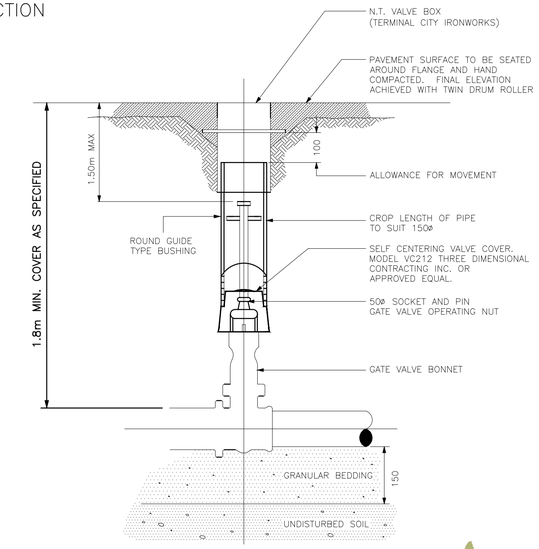

VALVE BOX ASSEMBLY

"These Record Drawings have been prepared based on information provided by the Contractor and others. Dayton & Knight Ltd. has not verified the accuracy or completeness of the information provided to them and does not warrant the accuracy or completeness of these Record Drawings. Users of these Record Drawings assume all risk of loss resulting from their use."

WHISTLER

PLOT: FULL 1:1 HALF 1:2

AutoCAD DRAWING

REVISIONS	ISSUE	DATE	DRAWN	CHK'D	APP'D	DESCRIPTION
	A	29/9/08	PW	WB	WB	ISSUED FOR TENDER
	B	NOV10/08	PW	WB	WB	ISSUED FOR CONSTRUCTION
	C	JUN03/10	AD	WB	WB	RECORD DRAWING

DESIGNED BW
DRAWN JE
CHECKED BW

Dayton & Knight Ltd.
CONSULTING ENGINEERS
#210-889 HARBOURSIDE DR., NORTH VANCOUVER, B.C. V7P 3S1
TEL.: (604) 990-4800 FAX: (604) 990-4805 www.dayton-knight.com

RESORT MUNICIPALITY OF WHISTLER
21 MILE CREEK UV DISINFECTION FACILITY
GENERAL DETAILS

SCALE: AS SHOWN
DRAWING No. 179.075.300
SHEET No. G11 ISSUE C

FILE: P:\Recdwgs\WHISTLER\179-75-3\GENERAL\179.75.3_site-alternate-construction1.dwg Tab: G11 11-01-17 richard

INSTRUMENT SYMBOLS

	CONTROL ROOM LOCATION ACCESSIBLE TO OPERATOR	CONTROL ROOM LOCATION INACCESSIBLE TO OPERATOR	LOCAL LOCATION ACCESSIBLE TO OPERATOR	LOCAL LOCATION INACCESSIBLE TO OPERATOR	FIELD LOCATED
DISCRETE INSTRUMENTS					
HMI FROM DISTRIBUTED CONTROL SYSTEM					
SCADA DISPLAY/ COMPUTER FUNCTION					
PROGRAMMABLE LOGIC CONTROLLER					

GENERAL NOTES

1. FADED SYMBOLS AND LINES REPRESENT EXISTING EQUIPMENT.
2. HATCHED EQUIPMENT AND LINES TO BE REMOVED.
3. FOR DETAILS OF INSTRUMENTATION LINES 1" OR LESS REFER TO INSTALLATION OR LOOP DIAGRAMS.
4. INSTRUMENTATION FOLLOWS ISA STANDARDS & PRACTICES 5.1, S5.2, S5.3, S5.4, S5.5.

FLOW UNITS

AIR:	m^3/HR
CHEMICALS:	kg PER DAY/ GRAMS PER LITRE/ LITRES PER SECOND
SEWERS:	LITRES PER SECOND
SOLIDS:	DRY METRIC TONNES PER DAY/ OR kg/D
WATER:	LITRES PER SECOND

*NOTE: NUMBERS INDICATE MAXIMUM FLOW FOR PIPE AND EQUIPMENT SIZING. CONTROL VALVES MAY BE SIZED FOR LESS.

EQUIPMENT GENERAL

AP	– ACID METER PUMP	OMI	– OPERATOR MACHINE INTERFACE
B	– BLOWER	P	– PUMP
BP	– CAUSTIC METER PUMP	PG	– PRESSURE GAUGE
CRN	– O/H CRANE	PLC	– PROGRAMMABLE LOGIC CONTROLLER
CPS	– COMPUTER	PRV	– PRESSURE REDUCING VALVE
CON	– CONVEYOR	SCB	– SCRUBBER
CV	– CHECK VALVE	SCC	– SECONDARY CLARIFIER
CP	– COMPRESSOR	SCRN	– ROTATING SCREEN
EF	– EXHAUST FAN	SF	– SUPPLY FAN
FC	– FLUSHING CONNECTION	SG	– SLIDE GATE
HE	– HEAT EXCHANGER	SLG	– SLUICE GATE
M	– MOTOR	SL	– STOP LOG
MXR	– MIXER	SP	– SLUDGE PUMP
MCB	– MASTER CONTROL BOARD	SV	– SOLENOID VALVE
MCC	– MOTOR CONTROL CENTRE	TK	– TANK
ME	– MECHANICAL EQUIPMENT	VA	– VALVE
MV	– MOTORIZED VALVE	UP	– UTILITY PUMP
		VT	– VENTURA–NOZZLE
		WG	– WEIR

PROCESS LINE TYPES

- MAIN (OR NEW) PROCESS LINE
- SECONDARY (OR EXISTING) PROCESS LINE
- EXISTING PIPING AND EQUIPMENT
- FUTURE PROCESS LINE
- EXISTING PIPING AND EQUIPMENT TO BE REMOVED
- OPEN CHANNEL (EXIST./NEW)

INSTRUMENT SIGNAL LINE TYPES

- CAPILLARY TUBE OR FILLED SYSTEM SIGNAL LINE
- ELECTRIC INSTRUMENT LINE – ANALOG
- ELECTRIC INSTRUMENT LINE – DIGITAL (ASD DRIVE)
- ELECTRIC INSTRUMENT SIGNAL (EXIST./NEW)
- ELECTRIC OR ELECTRONIC INSTRUMENT SIGNAL WITH DIRECTION AS SHOWN, PROCESS TAPS
- INTERNAL SYSTEM LINK (CPS, HMI)
- INTERNAL SYSTEM LINK (ISL – SOFTWARE OR DATA)
- PNEUMATIC INSTRUMENT SIGNAL
- SPARE

INSTRUMENT FUNCTIONAL IDENTIFICATION LETTERS

	FIRST LETTERS (4)		SUCCEEDING LETTERS (3)		
	MEASURED OR INITIATING VARIABLE	MODIFIER	READOUT OR PASSIVE FUNCTION	OUTPUT FUCTION	MODIFIER
A	ANALYSIS		ALARM		
B	BURNER, COMBUSTION		UNCLASSIFIED	CLOSE–STOP DECREASE	UNCLASSIFIED
C	CONDUCTIVITY, pH (ACIDITY)		CLOSE	CONTROL OR CONTROLLER	
D	DENSITY, SPECIFIC GRAVITY	DIFFERENTIAL		OPEN–START–INCREASE	
E	VOLTAGE (EMF)		SENSOR (PRIMARY ELEMENT)		
F	FLOW RATE	RATIO (FRACTION)			FAIL
G	GAS, GAUGING (DIMENSIONAL)		GLASS, VIEWING DEVICE		
H	HAND, MANUAL				H–HIGH–(ALARM) HH–HIGH–(SHUTDOWN)
I	CURRENT (ELECTRICAL)		INDICATE		
J	POWER	SCAN			
K	TIME, TIME SCHEDULE	TIME RATE OF CHANGE		CONTROL STATION	
L	LEVEL		LIGHT		L–LOW–(ALARM) LL–LOW–(SHUTDOWN)
M	MOTOR	MOMENTARY	MONITOR, ON OR OPERATE		MIDDLE, INTERMEDIATE
N	MOISTURE, HUMIDITY		UNCLASSIFIED	START	USER'S CHOICE
O	UNCLASSIFIED		OPEN ORIFICE, RESTRICTION POINT (TEST) CONNECTION	STOP	OVERLOAD
P	PRESSURE, VACUUM		POINT (TEST) CONNECTION	PNEUMATIC	
Q	QUANTITY	INTEGRATE, TOTALIZE	INTEGRATE, TOTALIZE	INTEGRATE OR TOTALIZE	
R	RADIATION, RADIOACTIVITY	RATIO	RECORD		
S	SPEED, FREQUENCY, SOLENOID	SAFETY		SWITCH OR SAFETY	
T	TEMPERATURE			TRANSMIT	
TQ	TORQUE				
TV	TELEVISION				
U	MULTIVARIABLE		MULTIFUNCTION	MULTIFUNCTION	MULTIFUNCTION
V	VIBRATION, MECHANICAL ANALYSIS			VALVE, DAMPER, LOUVRE	
VS	VISCOSITY				
W	WEIGHT, FORCE		WELL		
X	ON/OFF	X AXIS	UNCLASSIFIED	UNCLASSIFIED	UNCLASSIFIED
Y	EVENT, STATE OR PRESENCE	Y AXIS		RELAY, COMPUTE, CONVERT	
Z	POSITION, DIMENSION PRESENCE	Z AXIS		DRIVER, ACTUATOR, UNCLASSIFIED FINAL CONTROL ELEMENT	

ALARMS:

PC 069 H / L

HH = HIGH HIGH ALARM
H = HIGH ALARM
L = LOW ALARM
R = RATE ALARM

YS 327 % Q

PLC, % AI = ANALOG INPUT
% AQ = ANALOG OUTPUT
% Q = DISCRETE OUTPUT
% I = DISCRETE INPUT
YS = STATUS OF SWITCH (EVENT SWITCH)

EXAMPLES:

PI 22 — FIELD LOCATED DISCRETE PRESSURE INDICATOR

LAH 07 — CONTROL ROOM PC COMPUTER DISPLAY HIGH LEVEL ALARM

AREA CODES

100	HEADWORKS
200	PUMP STATION
300	ATAD, SEPTAGE, RBS
900	ADMINISTRATION

"These Record Drawings have been prepared based on information provided by the Contractor and others. Dayton & Knight Ltd. has not verified the accuracy or completeness of the information provided to them and does not warrant the accuracy or completeness of these Record Drawings. Users of these Record Drawings assume all risk of loss resulting from their use."

LINE NUMBERING SYSTEM

HPA 150 ST

FLUID CODE — MATERIAL — NOMINAL PIPE DIA.

FLUID CODE	FLUID	FLUID CODE	FLUID
CLS	CHLORINE SOLUTION	PLW	PLANT WATER
D	DRAIN	POL	POLYELECTROLYTE SOLUTION
FOM	FOAM	PW	POTABLE WATER
H_2SO_4	SULPHURIC ACID LINE	RC	RECIRCULATED FLOW
HDSL	HOT DIGESTED SLUDGE LINE	SS	SAMPLE SOLUTION
HPA	HIGH PRESSURE AIR	TD	TANK DRAIN
HWR	HOT WATER RETURN	TSL	THICKENED SLUDGE
HWS	HOT WATER SUPPLY	VT	VENT
LPA	LOW PRESSURE AIR	WAS	WASTE ACTIVATED SLUDGE
NaOH	CAUSTIC LINE		
NPW	NON POTABLE WATER		
OF	OVERFLOW		
OZ	OZONE		

NOTE: ALSO SEE MECHANICAL AND ELECTRICAL ABBREV.

GENERAL SYMBOLS AND TAGS

1. ON DRAWING (IE. P101) CONTINUATION IS SHOWN AS: P 102
2. ON DRAWING (IE. P102) CONTINUATION IS SHOWN AS: P 101

- EXISTING EQUIPMENT TAG
- NEW EQUIPMENT TAG
- EXISTING PIPE TAG
- NEW PIPE TAG
- 1 — REVISION TAG

ATTRIBUTE LEGEND

TYPICAL FORMAT

FI 905 % Q PLC #

OUTPUT — SUCCEEDING LETTER — FIRST LETTER — OUTPUT — PHYSICAL LOCATION — LOOP NUMBER — INPUT — ISA DESIGNATION

EQUIPMENT NUMBER

ME 1234.01

- ANCILLARY EQUIPMENT NUMBER
- MAIN EQUIPMENT NUMBER
- AREA
- FLUID: 1 – WASTEWATER, 2 – FRESH WATER, 3 – RESIDUALS, 4 – AIR, 5 – CHEMICALS
- EQUIPMENT GENERAL: EF – EXHAUST FAN, ME – MECHANICAL EQUIPMENT, P – PUMP, SF – SUPPLY FAN, T – TANK, SV – SOLENOID VALVE

LINE DESIGNATIONS

- ES — ELECTRIC POWER SUPPLY 120 VAC 60 HZ (UNLESS OTHERWISE NOTED)
- LINE CONTINUATION TO/FROM
- SPECIFICATION AND/OR LINE NUMBER CHANGE
- * SUPPLIED BY EQUIPMENT VENDOR

WHISTLER

PLOT: FULL 1:25 HALF 1:50

FILE: P:\Recdwgs\WHISTLER\179-75-3\PROCESS & INSTRUMENTATION\179-75-3 P1.dwg Tab Model 11-01-17 richard

AutoCAD DRAWING

REVISIONS	ISSUE	DATE	DRAWN	CHK'D	APP'D	DESCRIPTION	ISSUE	DATE	DRAWN	CHK'D	APP'D	DESCRIPTION
	A	SEP29/08	KS	WB	WB	ISSUED FOR TENDER						
	B	NOV10/08	KS	WB	WB	ISSUED FOR CONSTRUCTION						
	C	JUN03/10	AD	WB	WB	RECORD DRAWING						

DESIGNED WB
DRAWN DBC
CHECKED WB

Dayton & Knight Ltd.
CONSULTING ENGINEERS
#210-869 HARBOURSIDE DR., NORTH VANCOUVER, B.C. V7P 3S1
TEL.: (604) 990-4800 FAX: (604) 990-4805 www.dayton-knight.com

RESORT MUNICIPALITY OF WHISTLER
21 MILE CREEK UV DISINFECTION FACILITY
P&ID STANDARD TAGS AND ABBREVIATIONS

SCALE: NONE
DRAWING No. 179.75.3
SHEET No. P1 ISSUE C

EQUIPMENT

- BAR SCREEN, MECHANICAL
- BLOWER OR CENTRIFUGAL FAN
- CALIBRATION COLUMN CONTROL DAMPER
- CENTRIFUGE
- COMPRESSOR, ROTARY SCREW
- DIFFUSER HEADER
- FILTER OR FILTER–SILENCER INLET AIR
- MIXER
- MIXER, HORIZONTAL SURFACE
- MIXER, INLINE STATIC
- MOTOR (MAYBE ELECTRIC, HYDRAULIC OR PNEUMATIC
- MOTORIZED CONTROL DAMPER
- OUTFALL DIFFUSER
- PULSATION DAMPER
- TELESCOPIC GATE VALVE
- WEIR
- PUMP (GRINDER)
- PUMP (PERISTALIC/HOSE)
- PUMP (DUAL DIAPHRAGM)
- PUMP (PROGRESSIVE CAVITY)
- PUMP (ROTARY LOBE) OR BLOWER
- PUMP (SUBMERSIBLE)
- PUMP (VERTICAL)
- PUMP (CENTRIFUGAL)
- PUMP (METERING)
- RECEIVER OR PRESSURE VESSEL
- RESERVOIR
- SLIDE GATE (NORMALLY CLOSED)
- SLIDE GATE (NORMALLY OPEN)
- SLUICE GATE (NORMALLY CLOSED)
- SLUICE GATE (NORMALLY OPEN)
- STOP LOG (NORMALLY OPEN)
- STOP LOG (NORMALLY CLOSED)
- TANK

EQUIPMENT REQUIRING DRIVES:

EQUIPMENT TYPES:

- BLOWER OR FAN
- CENTRIFUGAL PUMP
- MOTOR

DRIVES

DRIVE TYPES:

- DRIVE–HYDRAULIC, PNEUMATIC, TURBINE OR INTERNAL COMBUSTION ENGINE
- ELECTRIC DRIVE

MODIFICATIONS:

- BACKSTOP, BRAKE OR CLUTCH
- DRIVE INTERLOCK
- DRIVE INTERLOCK SEQUENCE TERMINATION
- DRIVE PERSONAL SAFETY INTERLOCK
- EXISTING DRIVE
- NEW DRIVE
- REVERSIBLE
- VS — VARIABLE SPEED

- B — BUBBLER SYSTEM
- I — INTERLOCK – SEE CONTROL STRATEGY DESC.
- P — PURGE OR FLUSHING DEVICE

PIPING SYMBOLS

- AIR INTAKE
- AIR VENT
- A — ANNULAR TYPE INLINE PRESSURE SENSOR
- BLIND FLANGE
- CAMLOCK (UTILITY STATION)
- CAP OR PLUG
- CIRCULAR BLANK OR SPECTACLE BLIND
  - OPTIONS: NORMALLY OPEN; NORMALLY CLOSED
- QUICK CONNECTION (HOSE)
- FIXED CONNECTION (HOSE)
- DAMPER
- DESUPERHEATER INLINE
- DRAIN
- D — DRAIN/FUNNEL
- DRAIN TO FLOOR
- DRAIN TO TRENCH
- EJECTOR
- EQUIPMENT INSULATION
- EXPANSION JOINT
- FLAME ARRESTOR
- FLANGE
- FLEXIBLE CONNECTOR
- GOOSE NECK VENT
- GROUND — GROUND (ELECTRICAL)
- IN–LINE INSTRUMENT
- INSTRUMENT CHEMICAL DIAPHRAGM SEAL
- LINE SLOPE
- LIQUID LEVEL
- MIXER
- ORIFICE PLATE
- PIPE INSULATION
- E — PIPE HEAT TRACING E=ELECTRIC S=STEAM
- PIPE MATERIAL OR SIZE OR NEW / OLD JUNCTION
- PIPE PLUG
- PRESSURE GUAGE
- REDUCER
- FIC — ROTAMETER
- RUPTURE DISC
- SENSOR
- SIGHT GLASS
- STEAM TRAP WITHOUT BYPASS
- STEAM TRAP WITH BYPASS
- TYPICAL 3 OUTPUT SIGNAL TO CONTROL
- UNION
- UTILITY STATION (NUMBER, IF ANY, DESIGNATES TYPE)
- WELDED CAP
- Y–TYPE STRAINER

CO	CLEAN OUT
DC	DRAIN CONNECTION
FC	FLUSHING CONNECTION
SB	STEAM BLOW
SC	SAMPLE CONNECTION
TC	TEST CONNECTION

"These Record Drawings have been prepared based on information provided by the Contractor and others. Dayton & Knight Ltd. has not verified the accuracy or completeness of the information provided to them and does not warrant the accuracy or completeness of these Record Drawings. Users of these Record Drawings assume all risk of loss resulting from their use."

VALVE LABELLING SYSTEM

- BALL CHECK VALVE
- BALL VALVE
- BLAST GATE (BG)
- BUTTERFLY VALVE
- BUTTERFLY VALVE DAMPER VALVE
- CHECK VALVE
- CONTROL VALVE
- DIAPHRAGM VALVE
- FOUR–WAY VALVE
- GATE/MANUAL VALVE
- GLOBE VALVE
- KNIFE GATE VALVE
- MUD VALVE
- NEEDLE VALVE
- PINCH VALVE
- PLUG VALVE
- S — SOLENOID VALVE
- THREE–WAY VALVE
- DOUBLE CHECK VALVE BACKFLOW PREVENTER
- REDUCED PRESSURE BACKFLOW PREVENTER
- BACK PRESSURE REGULATING VALVE
- PRESSURE REDUCING
- PRESSURE REGULATING MODULATING VALVE,
- PRESSURE REGULATING VALVE (EXTERNAL SENSING)
- PRESSURE REGULATING VALVE (INTERNAL SENSING)
- ON/OFF VALVE
- PRESSURE RELIEF VALVE
- PRESSURE AND VACUUM RELIEF VALVE
- SAFETY RELIEF VALVE
- VACUUM RELIEF VALVE

OPTIONS: NORMALLY CLOSED; NORMALLY OPEN

FAIL OPTIONS: LOSS OF AIR (OR POWER)

FO	FAIL OPEN
FC	FAIL CLOSE
FI	FAIL INDETERMINATE
FL	FAIL LAST POSITION

EXAMPLE: PNEUMATIC CONTROL LINE; ON–OFF VALVE; NORMALLY CLOSED; FC — FAIL CLOSED

VALVE OPERATORS

- M — MOTOR ACTUATOR
- PNEUMATIC CYLINDER
- M — BLEED VALVE
- DIAPHRAGM (PRESSURE BALANCE)
- S — SOLENOID
- DIAPHRAGM (SPRING OPPOSED)

PRIMARY ELEMENT SYMBOLS

- ANNUBAR
- ANNULAR TYPE DIAPHRAGM PRESSURE SEAL
- DIAPHRAGM SEAL
- DISPLACEMENT LEVEL ELEMENT
- FT — FLOW ELEMENT INTEGRAL WITH TRANSMITTER (MASS FLOW, ETC)
- FLOAT LEVEL ELEMENT
- FLUME (PARSHALL OR TRAPEZOIDAL)
- VENTURI OR FLOW TUBE ANEMOMETER
- WEIR FLOWMETER
- IN–LINE PRESSURE SENSOR
- M — MAGNETIC FLOWMETER
- N — NUCLEAR DENSITY METER
- PITOT TUBE
- R — ROTAMETER
- R — 1–10 GPM ROTAMETER W/ NEEDLE VALVE
- TURBINE OR PROPELLER TYPE METER
- ULTRASONIC FLOWMETER
- LE — ULTRASONIC/MICROWAVE LEVEL ELEMENT
- ULTRASONIC LEVEL METER
- ULTRASONIC METER (STRAP ON)

WHISTLER

PLOT: FULL 1:25 HALF 1:50

FILE: P:\Recdwgs\WHISTLER\179-75-3\PROCESS & INSTRUMENTATION\179-75-3 P2.dwg Tab Model 11-01-17 richard

AutoCAD DRAWING

REVISIONS

ISSUE	DATE	DRAWN	CHK'D	APP'D	DESCRIPTION
A	SEP29/08	KS	WB	WB	ISSUED FOR TENDER
B	NOV10/08	KS	WB	WB	ISSUED FOR CONSTRUCTION
C	JUN03/10	AD	WB	WB	RECORD DRAWING

ISSUE	DATE	DRAWN	CHK'D	APP'D	DESCRIPTION

DESIGNED WB
DRAWN DBC
CHECKED WB

Dayton & Knight Ltd.
CONSULTING ENGINEERS
#210-869 HARBOURSIDE DR., NORTH VANCOUVER, B.C. V7P 3S1
TEL.: (604) 990-4800 FAX: (604) 990-4805 www.dayton-knight.com

RESORT MUNICIPALITY OF WHISTLER
21 MILE CREEK UV DISINFECTION FACILITY
P&ID STANDARD SYMBOLS
EQUIPMENT, VALVES AND INSTRUMENTATION

SCALE: NONE
DRAWING No. 179.75.3
SHEET No. P2 ISSUE C

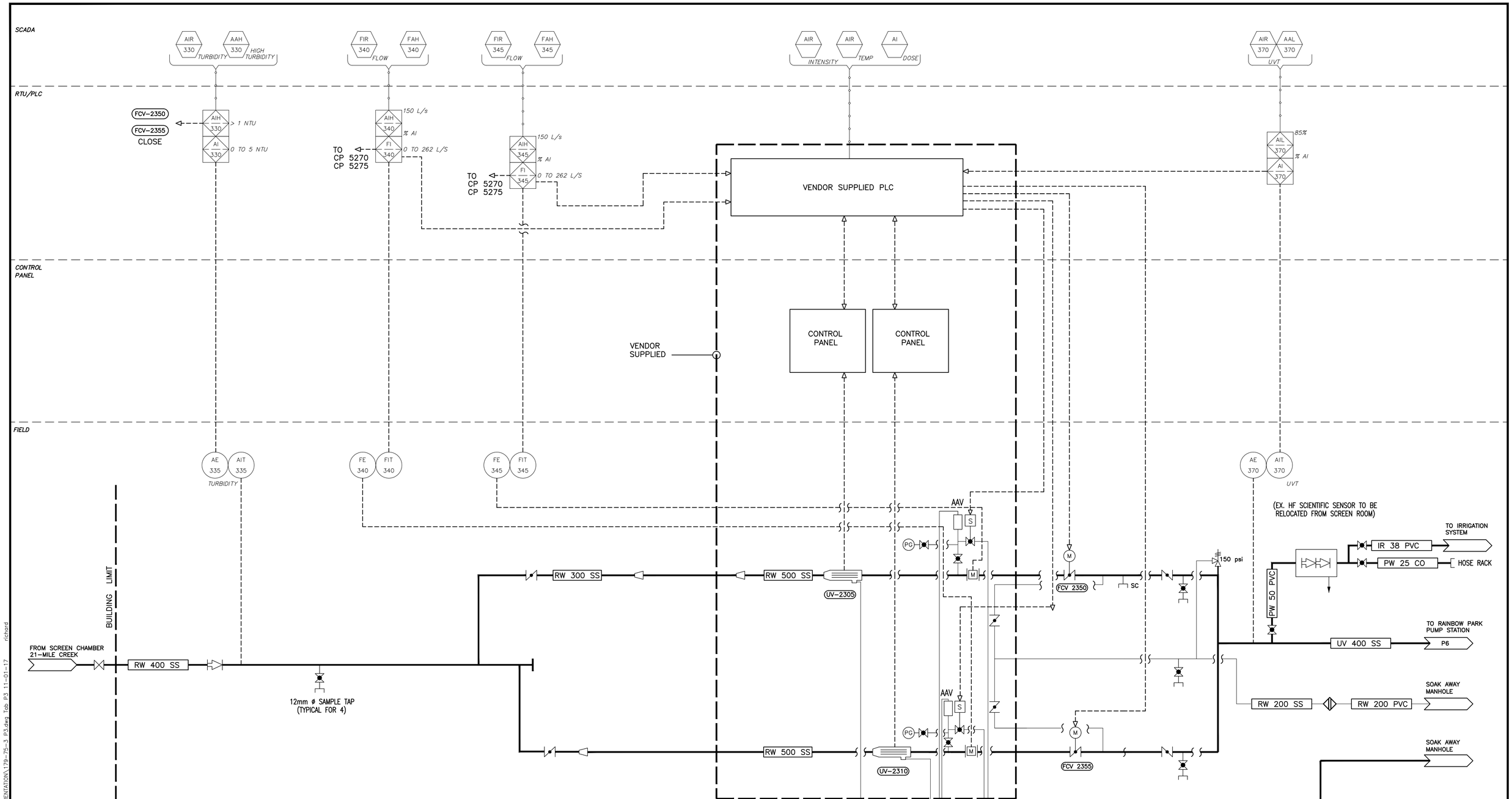

"These Record Drawings have been prepared based on information provided by the Contractor and others. Dayton & Knight Ltd. has not verified the accuracy or completeness of the information provided to them and does not warrant the accuracy or completeness of these Record Drawings. Users of these Record Drawings assume all risk of loss resulting from their use."

WHISTLER

PLOT: FULL 1:25 HALF 1:50

FILE: P:\Recdwgs\WHISTLER\179-75-3\PROCESS & INSTRUMENTATION\179-75-3 P3.dwg Tab P3 11-01-17 richard

AutoCAD DRAWING

REVISIONS

ISSUE	DATE	DRAWN	CHK'D	APP'D	DESCRIPTION	ISSUE	DATE	DRAWN	CHK'D	APP'D	DESCRIPTION
A	SEP29/08	KS	WB	WB	ISSUED FOR TENDER	D	NOV10/08	KS	WB	WB	ISSUED FOR CONSTRUCTION
B	OCT14/08	DBC	WB	WB	1 ADDENDUM No.1	E	JUN03/10	AD	WB	WB	RECORD DRAWING
C	OCT20/08	KS	WB	WB	2 ADDENDUM No.2						

DESIGNED WB
DRAWN KS/AIS/RB
CHECKED WB

Dayton & Knight Ltd.
CONSULTING ENGINEERS
#210-889 HARBOURSIDE DR., NORTH VANCOUVER, B.C. V7P 3S1
TEL.: (604) 990-4800 FAX: (604) 990-4805 www.dayton-knight.com

RESORT MUNICIPALITY OF WHISTLER
21 MILE CREEK UV DISINFECTION FACILITY
PROCESS AND INSTRUMENTATION

SCALE: NTS
DRAWING No. 179.75.3
SHEET No. P3 ISSUE E

DOOR FRAME TYPES

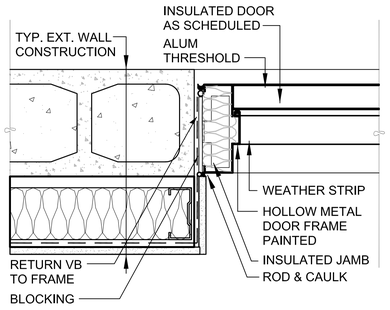

TYPE A

DOOR TYPES

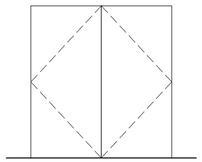

A DOUBLE FLUSH

ROOF TYPES

R1

CORRUGATED METAL PANEL
UNDERLAYMENT MEMBRANE
19 P.T. PLYWOOD SHEATHING
R40 RIGID INSULATION
VAPOUR BARRIER
METAL DECK
STEEL FRAMING

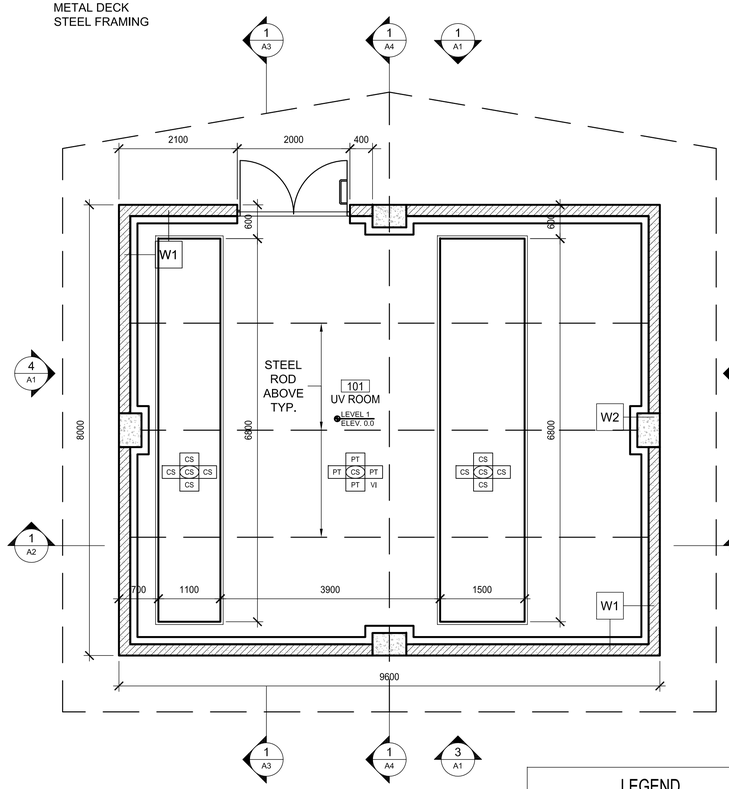

1 MAIN FLOOR PLAN
Scale: 1:50

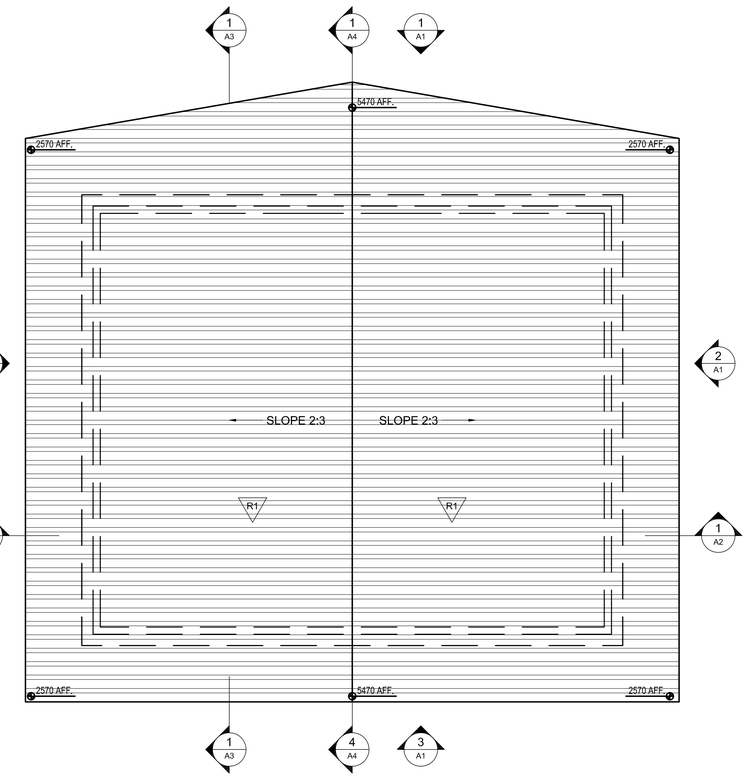

2 ROOF PLAN
Scale: 1:50

WALL TYPES

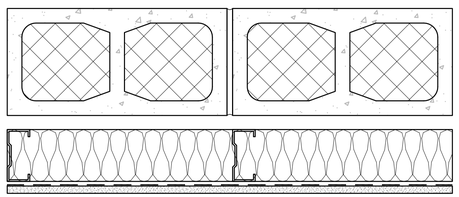

W1

UP TO ELEV. 2700	ABOVE ELEV. 2700
CONCRETE ELASTOMERIC SEALER	CORRUGATED METAL PANEL AS SPECIFIED
190x390 CMU FILLED W/ INSULATION	AIR BARRIER
AIR BARRIER	13 P.T. PLYWOOD SHEATHING
15 AIR SPACE	92 ST. STUD C/W 76 BATT INSULATION
92 STEEL STUD C/W 76 MINERAL WOOL INSULATION	50 AIR SPACE
VAPOUR BARRIER	92 ST. STUD C/W 76 BATT INSULATION
13 P.T. PLYWOOD UP TO 2.0m AFF	VAPOUR BARRIER
13 WATER RESISTENT DRYWALL ABOVE 2.0m AFF	13 WATER RESISTENT DRYWALL ABOVE 2.0m AFF
	REFER TO 1/A3

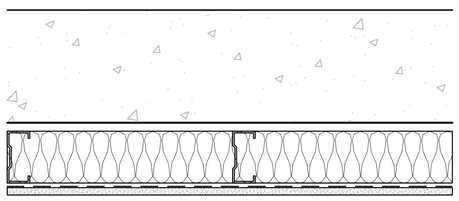

W2

UP TO ELEV. 2700	ABOVE ELEV. 2700
CONCRETE ELASTOMERIC SEALER	CORRUGATED METAL PANEL
REINFORCED CONCRETE WALL AS PER STRUCTURAL	SELF ADHERING WP MEMBRANE
AIR BARRIER	13 P.T. PLYWOOD
15 AIR SPACE	92 ST. STUD C/W 76 BATT INSULATION
92 STEEL STUD C/W 76 MINERAL WOOL INSULATION	50 AIR SPACE
VAPOUR BARRIER	92 ST. STUD C/W 76 BATT INSULATION
13 P.T. PLYWOOD UP TO 2.0m AFF	VAPOUR BARRIER
13 WATER RESISTENT DRYWALL ABOVE 2.0m AFF	13 WATER RESISTENT DRYWALL ABOVE 2.0m AFF
	REFER TO 1/A3

LEGEND

PT	PAINT; COLOUR BY ENGINEER
EP1	EPOXY COATING; SEE SPECIFICATION SECTION 09800
IC	150 INTEGRATED COVE BASE

DOOR SCHEDULE

ROOM DOOR NO.	ROOM NO.	ROOM NAME	DOOR TYPE	DOOR WIDTH	DOOR HEIGHT	DOOR THICK	DOOR MATL.	DOOR MATERIAL	DOOR FIN.	FRAME TYPE	FRAME SIZE	FRAME MATL.	FRAME FINISH	FRAME FIN.	RATING LABEL TEMP RISE	RATING LABEL TIME	HARDWARE GROUP BASE /SECURE	KEY NOTES	REV.
D01	101	UV ROOM	A	2 x 945	2050	45	INSULATED	METAL	PAINTED	A	50 x 146	METAL	PAINTED	PAINTED			SEE SPEC		

ROOM FINISH SCHEDULE

All materials must be submitted to Consultant for approval prior to ordering or materials will be rejected.

ROOM NO.	ROOM NAME	FLOOR SUBSTRATE	FLOOR FINISH	BASE FINISH	WALLS NORTH SUBSTRATE	WALLS NORTH FINISH	WALLS SOUTH SUBSTRATE	WALLS SOUTH FINISH	WALLS EAST SUBSTRATE	WALLS EAST FINISH	WALLS WEST SUBSTRATE	WALLS WEST FINISH	CEILING SUBSTRATE	CEILING FINISH	REMARKS
101	UV ROOM	CONC	CS	VI	GWB	PT	GWB	PT	GWB	PT	GWB	PT	STL	PT	

FINISHES LEGEND:

VI	VINYL COVE BASE	**PT**	PAINT	**STL**	STEEL	**CS**	CONCRETE SEALANT SEE SPEC. 09705
GWB	GYPSUM/PLYWOOD	**CONC**	CONCRETE MASONRY UNIT/CONCRETE				

WHISTLER

T R B ARCHITECTURE INC.
Suite 410 - 1444 Alberni Street Vancouver, B.C. V6G 2Z4
Telephone (604) 682-6881
Facsimilie (604) 682-3081
E-Mail trbp@trbp.bc.ca

PLOT: FULL 1:5 HALF 1:10

AutoCAD DRAWING

REVISIONS

ISSUE	DATE	DRAWN	CHK'D	APP'D	DESCRIPTION	ISSUE	DATE	DRAWN	CHK'D	APP'D	DESCRIPTION
A	SEPT 29/08				ISSUED FOR TENDER	D	JUN 15/10				AS-BUILT DRAWINGS
B	OCT 8/08				ADDENDUM #1						
C	NOV 10/08				ISSUED FOR CONSTRUCTION						

DESIGNED MR
DRAWN KS
CHECKED MR

Dayton & Knight Ltd.
CONSULTING ENGINEERS
#210-889 HARBOURSIDE DR., NORTH VANCOUVER, B.C. V7P 3S1
TEL.: (604) 990-4800 FAX: (604) 990-4805 www.dayton-knight.com

RESORT MUNICIPALITY OF WHISTLER
WHISTLER FITNESS CENTRE
PLANS & SCHEDULES

SCALE: AS SHOWN
DRAWING No. 179.75.1
SHEET No.
ISSUE A
THIS DRAWING REDUCED TO HALFSIZE

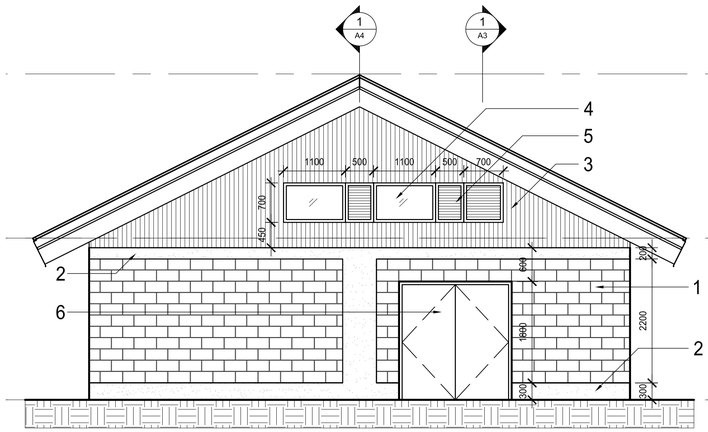

1 NORTH ELEVATION
Scale: 1:50

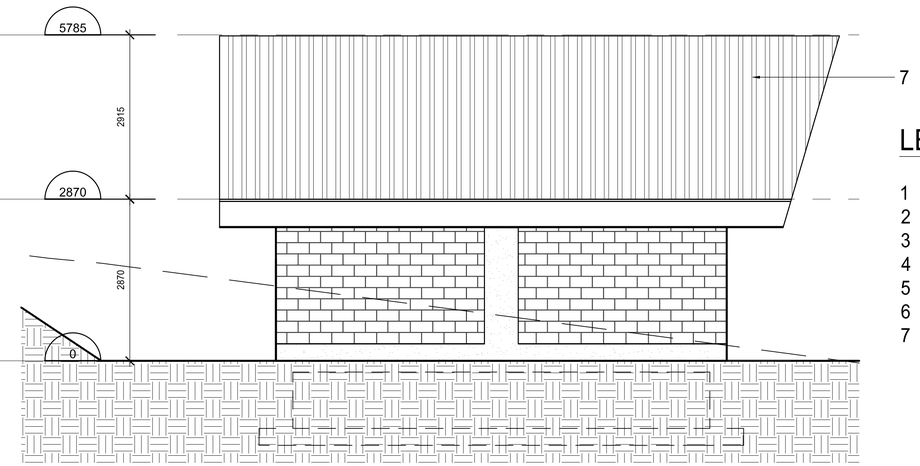

2 EAST ELEVATION
Scale: 1:50

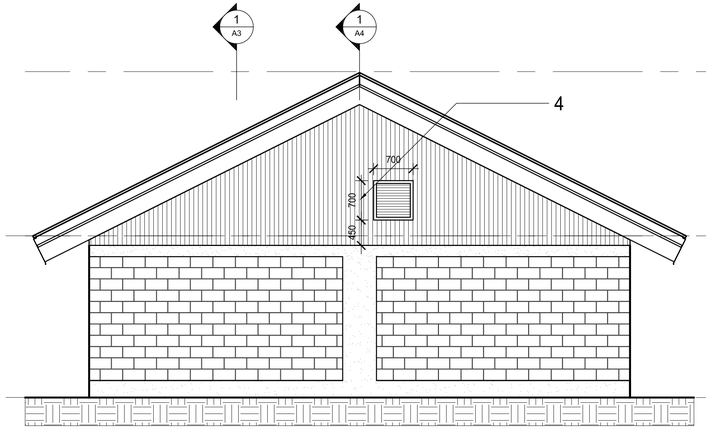

3 SOUTH ELEVATION
Scale: 1:50

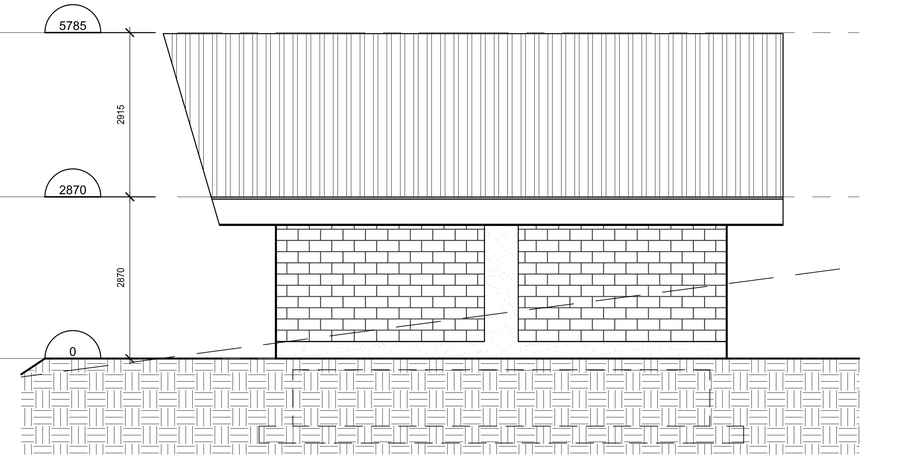

4 WEST ELEVATION
Scale: 1:50

LEGEND

1 CONCRETE MASONRY UNIT - SPLIT FACE
2 CONCRETE
3 CORRUGATED METAL PANEL
4 EXHAUST GRILLE
5 GLAZING IN STEEL FRAME
6 INSULATED METAL DOOR
7 CORRUGATED METAL ROOF WITH MATCHING FACIA AS SPECIFIED

WHISTLER

T R B ARCHITECTURE INC.
Suite 410 - 1444 Alberni Street Vancouver, B.C. V6G 2Z4
Telephone (604) 682-6881
Facsimilie (604) 682-3081
E-Mail trbp@trbp.bc.ca

PLOT: FULL 1:5 HALF 1:10

AutoCAD DRAWING

REVISIONS

ISSUE	DATE	DRAWN	CHK'D	APP'D	DESCRIPTION	ISSUE	DATE	DRAWN	CHK'D	APP'D	DESCRIPTION
A	SEPT 29/08				ISSUED FOR TENDER	D	JUN 15/10				AS-BUILT DRAWINGS
B	OCT 8/08				ADDENDUM #1						
C	NOV 10/08				ISSUED FOR CONSTRUCTION						

DESIGNED MR
DRAWN KS
CHECKED MR

Dayton & Knight Ltd.
CONSULTING ENGINEERS
#210-889 HARBOURSIDE DR., NORTH VANCOUVER, B.C. V7P 3S1
TEL.: (604) 990-4800 FAX: (604) 990-4805 www.dayton-knight.com

SCALE: AS SHOWN
DRAWING No. 179.75.1
SHEET No. A1 ISSUE A
THIS DRAWING REDUCED TO HALFSIZE

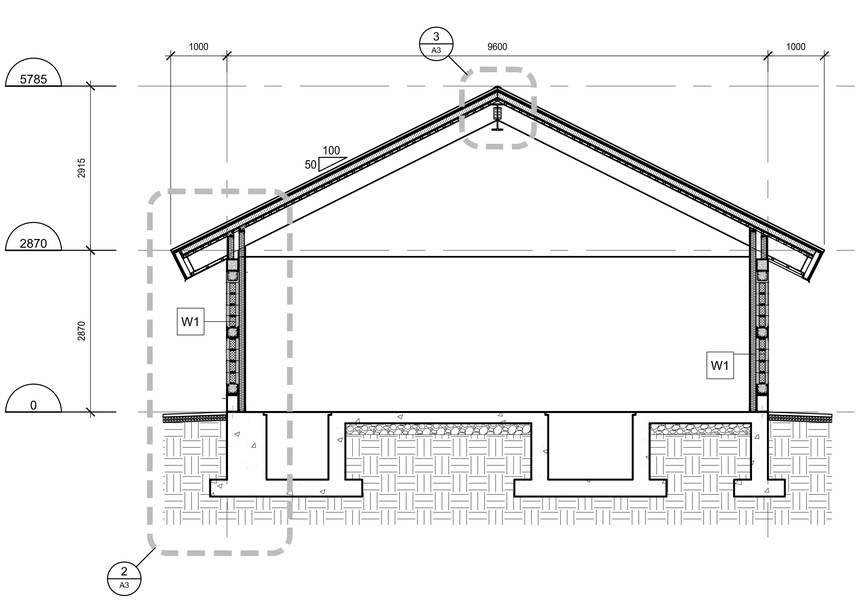

1 SECTION E-W

Scale: 1:50

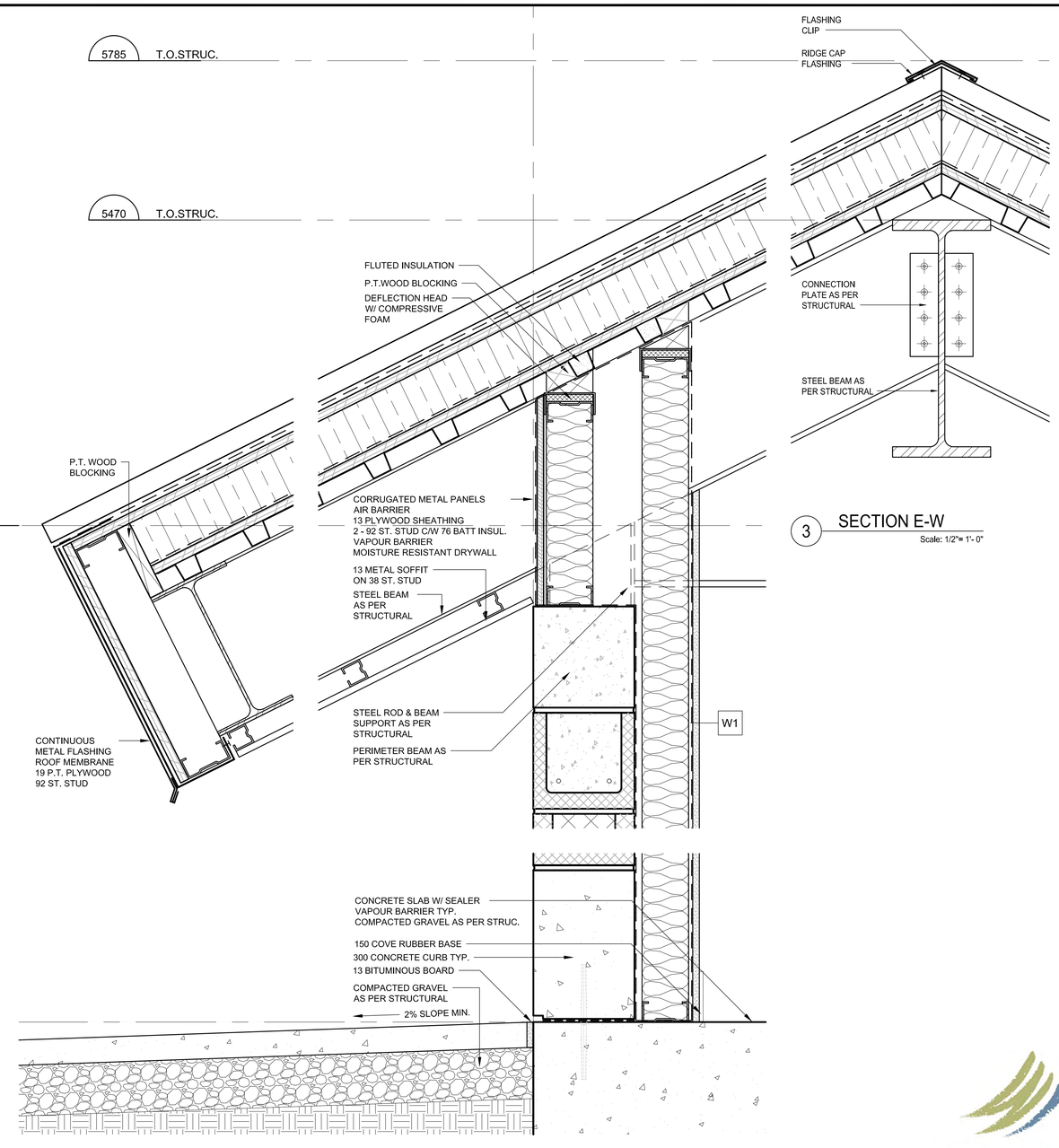

3 SECTION E-W

Scale: 1/2"= 1'- 0"

2 SECTION DETAIL

Scale: 1:5

WHISTLER

T R B ARCHITECTURE INC.
Suite 410 - 1444 Alberni Street Vancouver, B.C. V6G 2Z4
Telephone (604) 682-6881
Facsimilie (604) 682-3081
E-Mail trbp@trbp.bc.ca

PLOT: FULL 1:5 HALF 1:10

AutoCAD DRAWING

REVISIONS

ISSUE	DATE	DRAWN	CHK'D	APP'D	DESCRIPTION	ISSUE	DATE	DRAWN	CHK'D	APP'D	DESCRIPTION
A	SEPT 29/08				ISSUED FOR TENDER	D	JUN 15/10				AS-BUILT DRAWINGS
B	OCT 8/08				ADDENDUM #1						
C	NOV 10/08				ISSUED FOR CONSTRUCTION						

DESIGNED MR
DRAWN KS
CHECKED MR

Dayton & Knight Ltd.
CONSULTING ENGINEERS
#210-889 HARBOURSIDE DR., NORTH VANCOUVER, B.C. V7P 3S1
TEL.: (604) 990-4800 FAX: (604) 990-4805 www.dayton-knight.com

SCALE: AS SHOWN

DRAWING No. 179.75.1

SHEET No. ISSUE A

THIS DRAWING REDUCED TO HALFSIZE

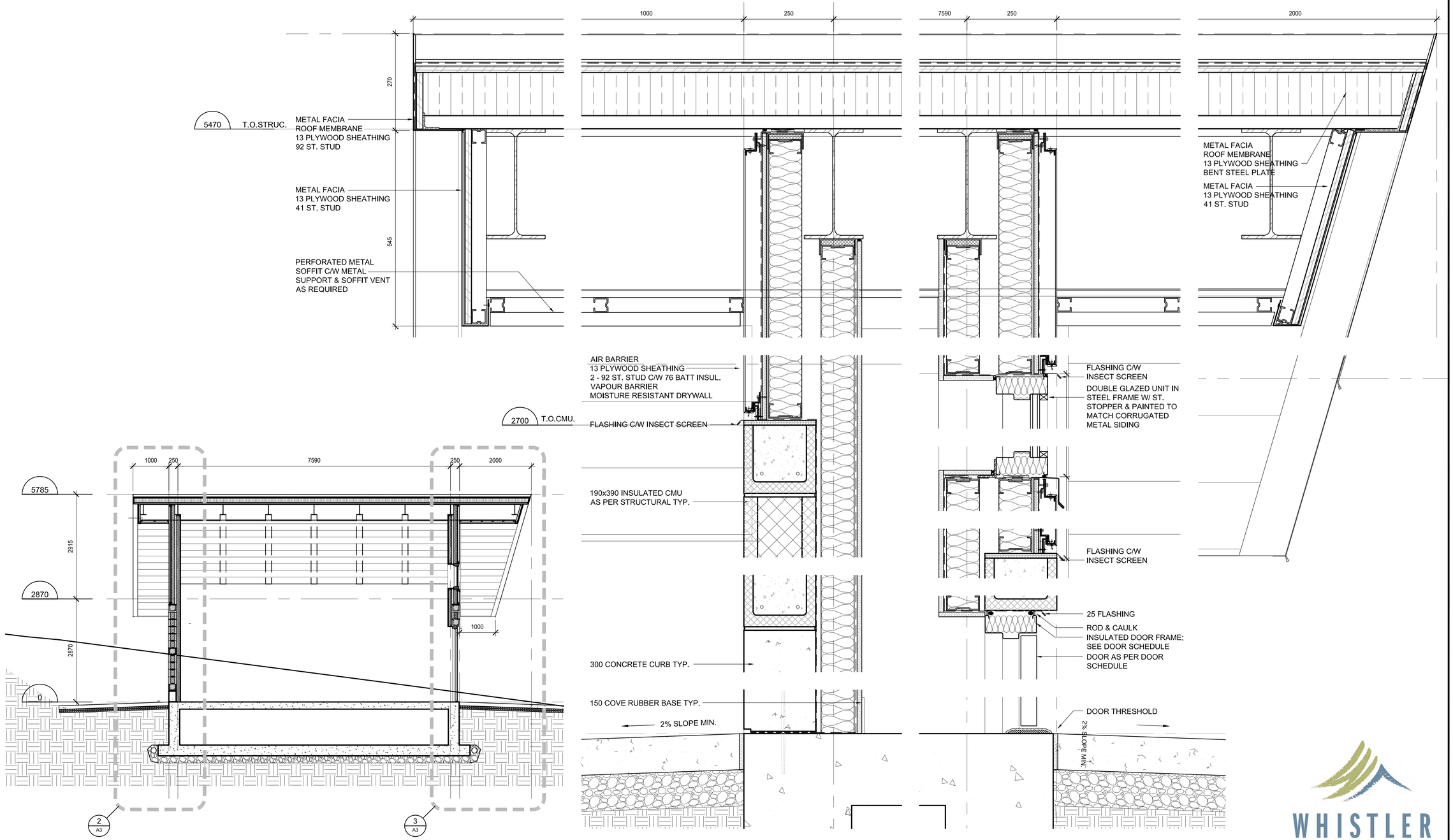

WHISTLER

T R B ARCHITECTURE INC.
Suite 410 - 1444 Alberni Street Vancouver, B.C. V6G 2Z4
Telephone (604) 682-6881
Facsimilie (604) 682-3081
E-Mail trbp@trbp.bc.ca

PLOT: FULL 1:5 HALF 1:10

AutoCAD DRAWING

REVISIONS

ISSUE	DATE	DRAWN	CHK'D	APP'D	DESCRIPTION	ISSUE	DATE	DRAWN	CHK'D	APP'D	DESCRIPTION
A	SEPT 29/08				ISSUED FOR TENDER	D	JUN 15/10				AS-BUILT DRAWINGS
B	OCT 8/08				ADDENDUM #1						
C	NOV 10/08				ISSUED FOR CONSTRUCTION						

DESIGNED MR
DRAWN KS
CHECKED MR

Dayton & Knight Ltd.
CONSULTING ENGINEERS
#210-889 HARBOURSIDE DR., NORTH VANCOUVER, B.C. V7P 3S1
TEL.: (604) 990-4800 FAX: (604) 990-4805 www.dayton-knight.com

SCALE: AS SHOWN
DRAWING No. 179.75.1
SHEET No. ISSUE A
THIS DRAWING REDUCED TO HALFSIZE

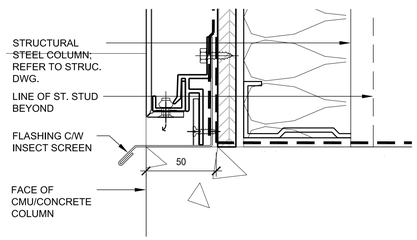

4 SECTION DETAIL
Scale: 1:2

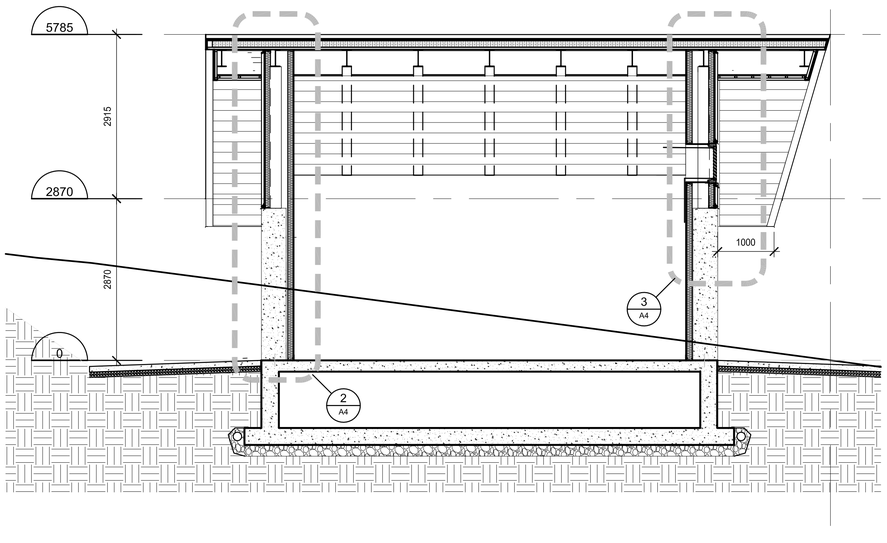

1 SECTION E-W
Scale: 1:50

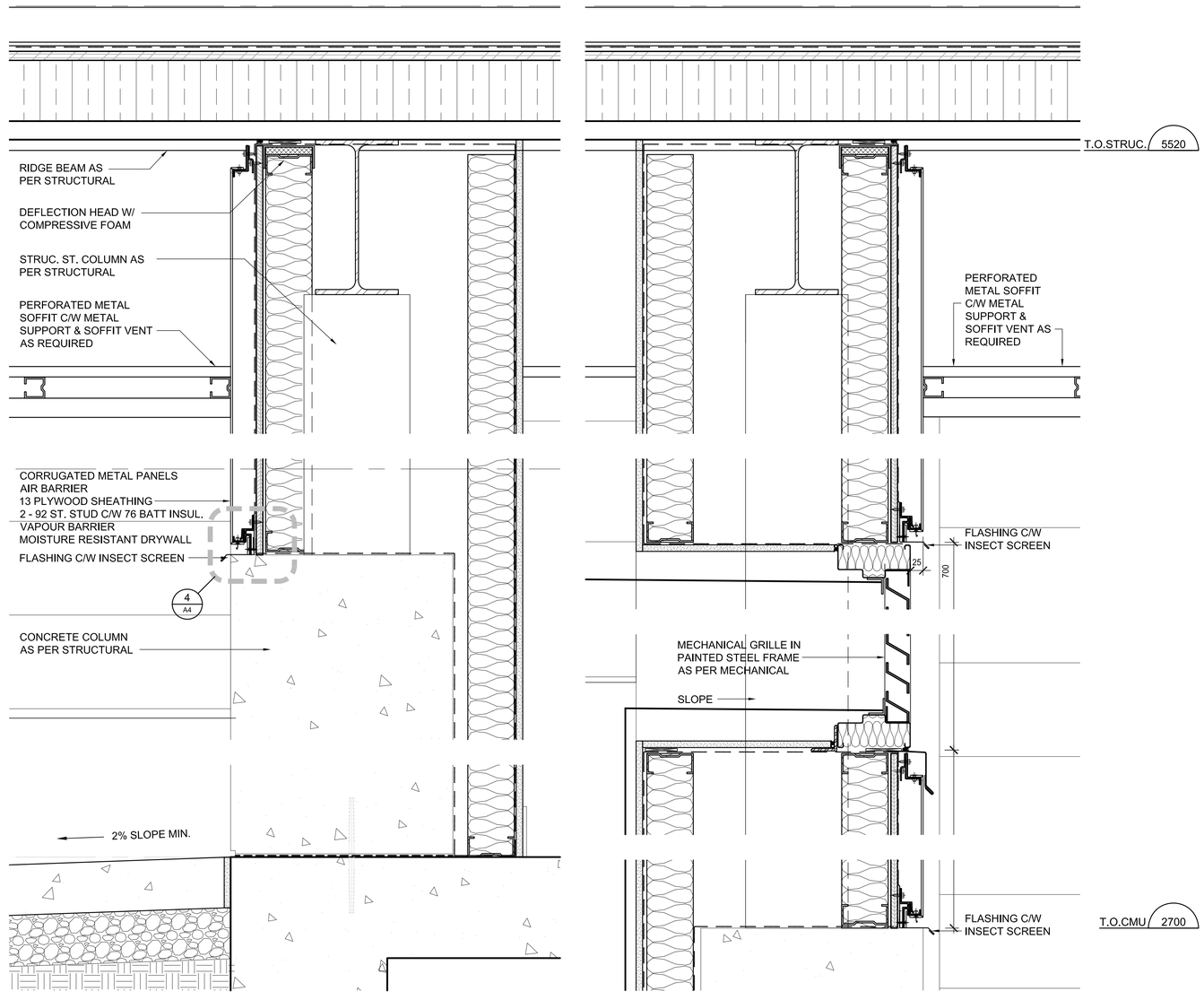

2 SECTION DETAIL
Scale: 1:5

3 SECTION E-W
Scale: 1:5

WHISTLER

T R B ARCHITECTURE INC.
Suite 410 - 1444 Alberni Street Vancouver, B.C. V6G 2Z4
Telephone (604) 682-6881
Facsimilie (604) 682-3081
E-Mail trbp@trbp.bc.ca

PLOT: FULL 1:5 HALF 1:10

AutoCAD DRAWING

REVISIONS

ISSUE	DATE	DRAWN	CHK'D	APP'D	DESCRIPTION	ISSUE	DATE	DRAWN	CHK'D	APP'D	DESCRIPTION
A	SEPT 29/08				ISSUED FOR TENDER	D	JUN 15/10				AS-BUILT DRAWINGS
B	OCT 8/08				ADDENDUM #1						
C	NOV 10/08				ISSUED FOR CONSTRUCTION						

DESIGNED MR
DRAWN KS
CHECKED MR

Dayton & Knight Ltd.
CONSULTING ENGINEERS
#210-889 HARBOURSIDE DR., NORTH VANCOUVER, B.C. V7P 3S1
TEL.: (604) 990-4800 FAX: (604) 990-4805 www.dayton-knight.com

SCALE: AS SHOWN
DRAWING No. 179.75.1
SHEET No. A4 ISSUE A
THIS DRAWING REDUCED TO HALFSIZE

GENERAL CONSTRUCTION NOTES

GENERAL NOTES

1. *SCOPE :* THE NOTES AND DETAILS ON THIS SHEET ARE GENERAL AND APPLY TO THE ENTIRE PROJECT EXCEPT WHERE THERE ARE SPECIFIC INDICATIONS TO THE CONTRARY.
2. *APPLICABLE SPECIFICATIONS AND CODES :* CONSTRUCTION SHALL BE IN ACCORDANCE WITH THE LATEST EDITION OF THE NATIONAL BUILDING CODE EXCEPT WHERE OTHER APPLICABLE CODES OR THE FOLLOWING NOTES ARE MORE RESTRICTIVE.
3. *DIMENSIONS :* STRUCTURAL DIMENSIONS CONTROLLED BY OR RELATED TO MECHANICAL OR ELECTRICAL EQUIPMENT SHALL BE VERIFIED BY THE CONTRACTOR PRIOR TO CONSTRUCTION.
4. *PROVISIONS FOR EQUIPMENT :* MECHANICAL AND ELECTRICAL EQUIPMENT SUPPORTS, ANCHORAGES, OPENINGS, RECESSES AND REVEALS NOT SHOWN ON THE STRUCTURAL DRAWINGS BUT REQUIRED BY OTHER CONTRACT DRAWINGS SHALL BE PROVIDED FOR PRIOR TO CASTING CONCRETE.
5. *CONSTRUCTION LOADS :* STRUCTURES HAVE BEEN DESIGNED FOR OPERATION LOADS ON THE COMPLETED STRUCTURES. DURING CONSTRUCTION, THE STRUCTURES SHALL BE PROTECTED BY BRACING AND BALANCING WHEREVER EXCESSIVE CONSTRUCTION LOADS MAY OCCUR. ALL TEMPORARY AND PERMANENT SURCHARGE LOADS SHALL BE CONSIDERED.
6. THE CONTRACTOR IS RESPONSIBLE FOR SHORING AND UNDERPINNING. DOCUMENTS RELATING TO THIS WORK SHALL BE SEALED AND SIGNED BY A BRITISH COLUMBIA PROFESSIONAL ENGINEER.
7. *DRAINAGE SURFACES :* FLOOR ELEVATIONS SHOWN ON CONCRETE OUTLINE DRAWINGS ARE PERIMETER ELEVATIONS FOR STRUCTURAL SLABS AND MAY NOT INDICATE FLOOR SLOPES, TOPPING OR FLOOR ELEVATIONS. FOR AREAS REQUIRING FLOOR SLOPES, TOPPING AND FLOOR DRAIN (ELEVATIONS AND LOCATIONS), SEE ARCHITECTURAL AND MECHANICAL DRAWINGS.

f_c = 30 MPa, f_y = 400 MPa

BAR SIZE	MINIMUM STRAIGHT EMBEDMENT DEVELOPMENT LENGTHS (mm)		MINIMUM TENSION EMBEDMENT WITH STANDARD END HOOKS E
	COMPRESSION	TENSION	
10M	200	300	200
15M	280	450	200
20M	340	600	220
25M	440	1000	450
30M	530	1200	630

f_c = 30 MPa, f_y = 400 MPa

BAR SIZE	LAP SPLICE LENGTHS (mm)	
	TENSION	COMPRESSION
10M	400	300
15M	600	450
20M	800	600
25M	1200	750
30M	1600	900

NOTES :

1. FOR LOCATION OF PIPING, FLOOR DRAINS, ELECTRICAL / INSTRUMENTATION CONDUIT, VENTILATION DUCTS WHICH PASS THROUGH CONCRETE SLABS, WALLS AND/OR ROOFS, REFER TO THE MECHANICAL, VENTILATION, ELECTRICAL AND INSTRUMENTATION DRAWINGS TO COORDINATE THIS PART OF THE WORK.
2. FOR DETAILS OF NEW FOUNDATION DRAINS, WHICH PASSED UNDERNEATH NEW CONCRETE SLABS REFER TO GENERAL DRAWINGS, UNLESS NOTED OTHERWISE IN SPECIFICATIONS.

STEEL

1. *APPLICABLE SPECIFICATIONS AND CODES :* STEEL CONSTRUCTION SHALL CONFORM TO CSA S16 "STEEL STRUCTURES FOR BUILDINGS" AS CONTAINED IN THE NATIONAL BUILDING CODE.
2. *BOLTED JOINTS* EXCEPT FOR BOLTS ANCHORED IN CONCRETE, BOLTED JOINTS SHALL CONFORM TO THE SPECIFICATIONS OF THE CANADIAN INSTITUTE OF STEEL CONSTRUCTION. BOLTS SHALL BE AS SPECIFIED ON THE DRAWINGS, OR, AT LEAST 13mm DIAMETER IF NOT SPECIFIED ON THE DRAWINGS.
3. *ANCHOR BOLTS :* BOLTS ANCHORED IN CONCRETE, IF NOT SPECIFIED ON THE DRAWINGS, SHALL BE 13mm DIAMETER WITH 225mm EMBEDDED AND SHALL CONFORM TO ASTM A-36.
4. *ENCASED STEEL :* STEEL COMPLETELY ENCASED IN CONCRETE SHALL NOT BE PAINTED AND SHALL HAVE A CLEAN SURFACE FOR BONDING TO CONCRETE.

ALUMINUM

1. *APPLICABLE SPECIFICATIONS AND CODES :* ALUMINUM CONSTRUCTION SHALL CONFORM TO CAN3-S157 ''STRENGTH DESIGN IN ALUMINUM'' AS SPECIFIED IN THE NATIONAL BUILDING CODE.
2. ALUMINUM PLACED IN CONTACT WITH CONCRETE, MORTAR, PLASTER OR DISSIMILAR METALS SHALL BE GIVEN A PROTECTIVE SEALING COAT OF ZINC CHROMATE EPOXY OR ALKALI-RESISTANT BITUMINOUS PAINT.

MASONRY

1. *APPLICABLE SPECIFICATIONS AND CODES :* MASONRY CONSTRUCTION SHALL CONFORM TO CAN3-S157 AS SPECIFIED IN THE NATIONAL BUILDING CODE.
2. VERTICAL REINFORCING SHALL BE 1 - 15M BARS FOR FULL HEIGHT OF WALL IN A CAVITY AT MAXIMUM 0.60 METRE SPACING C/C AND AT ALL CORNERS, AND 1-15M ADJACENT TO OPENINGS LARGER THAN 600mm.
3. HORIZONTAL REINFORCING SHALL BE "DURWALL" OR "WAL-LOK" STANDARD WT BRIGHT FINISH AT 400mm SPACING AND 2-15M HORIZONTAL REINFORCING CONTINUOUS IN BOND BEAMS SPACED 1200 C/C AND IN LINTELS FOR OPENINGS OF LESS THAN 1200 WITH 400 BEARINGS ON BOTH SIDES OF OPENINGS.
4. FOR MORE INFORMATION SEE S3 DRAWING.

STRUCTURAL LEGEND

- NEW CONCRETE
- EXISTING CONCRETE
- TOP REINFORCING (PLAN VIEW)
- BOTTOM REINFORCING (PLAN VIEW)

''These Record Drawings have been prepared based on information provided by the Contractor and others. Dayton & Knight Ltd. has not verified the accuracy or completeness of the information provided to them and does not warrant the accuracy or completeness of these Record Drawings. Users of these Record Drawings assume all risk of loss resulting from their use."

CONCRETE

1. *APPLICABLE SPECIFICATIONS AND CODES :* CONCRETE CONSTRUCTION SHALL CONFORM TO CSA 23.3-04 "DESIGN OF CONCRETE STRUCTURES FOR BUILDING" AS SPECIFIED IN THE NATIONAL BUILDING CODE OF CANADA 2005.
2. *REINFORCING STEEL DETAILS :* ALL DETAILING, FABRICATING AND ERECTION OF STEEL REINFORCING BARS, UNLESS OTHERWISE NOTED, SHALL BE IN ACCORDANCE WITH THE "METRIC SUPPLEMENT" IN CONJUNCTION WITH THE "REINFORCING STEEL MANUAL OF STANDARD PRACTICE", AS AVAILABLE FROM THE WESTERN REINFORCING CONTRACTORS ASSOCIATION.
3. *MINIMUM REINFORCING :* CONCRETE CONSTRUCTION SHALL BE REINFORCED CONCRETE EXCEPT WHERE PLAIN CONCRETE (P/C) IS SPECIFIED ON THE DRAWINGS, IN WHICH CASE NO REINFORCEMENT SHALL BE USED. CONCRETE THAT IS NOT DESIGNATED P/C AND HAS NO REINFORCEMENT INDICATED SHALL BE REINFORCED ACCORDING TO THE FOLLOWING SCHEDULES :

   A) STEEL FOR WALLS AND SLABS

THICKNESS	REINFORCEMENT EACH WAY SIZE	SPACING	POSITION
150	10M	300 C/C	ON ℄
200	15M	300 C/C	ON ℄
250	15M	300 C/C	EF
300	15M	300 C/C	EF
350	15M	250 C/C	EF
400	20M	300 C/C	EF
450	20M	250 C/C	EF

   MASS CONCRETE SHALL BE REINFORCED WITH 15M BARS AT 300 MINIMUM IN ALL FACES.

   B) 10M @ 450 SHALL BE USED AS TRANSVERSE TIES IF NO OTHER REINFORCING IS NOTED.

4. *CONCRETE COVER :* CONCRETE COVER OF REINFORCING BARS, IF NOT SPECIFIED ON THE DRAWINGS, SHALL BE AS FOLLOWS OR SHALL BE EQUAL TO THE DIAMETER OF THE MAIN REINFORCING BAR IT COVERS, WHICHEVER IS LARGER :

	CONDITION	SPECIFIED COVER (mm)
A)	CONCRETE CAST AGAINST GROUND	75
B)	CONCRETE EXPOSED TO EARTH, LIQUIDS OR WEATHER	
	i) 20M BARS OR LARGER	50
	ii) 10M AND 15M BARS	40
C)	CONCRETE SLABS OR WALLS NOT EXPOSED TO EARTH, LIQUIDS OR WEATHER	20
D)	CONCRETE BEAMS OR COLUMNS	50

5. REINFORCING BAR DEVELOPMENT AND LAP LENGTHS REINFORCING BAR DEVELOPMENT LENGTH AND LAP SPLICE LENGTHS SHALL BE AS SPECIFIED ON THE DRAWINGS OR IN ACCORDANCE WITH THE FOLLOWING SCHEDULES, WHICHEVER IS THE LONGER LENGTH :

   i) DOWELS SHALL BE THE SAME SIZE AND SPACING AS BARS WITH WHICH THEY ARE LAPPED, UNLESS OTHERWISE NOTED.

   ii) THE LENGTH OF LAP SPLICE OF BARS OF DIFFERENT DIAMETERS SHALL BE BASED ON THE BAR WITH THE SMALLER DIAMETER.

6. *STANDARD HOOK :* BARS ENDING IN RIGHT ANGLE BENDS OR HOOKS SHALL CONFORM TO THE REQUIREMENTS OF CSA CAN3-A23.1
7. *ANCHORAGE :* IF THE EMBEDMENT LENGTH IS LIMITED DUE TO THE LIMITED EXTENT OF THE CONCRETE STRUCTURE, THE BARS SHALL EXTEND AS FAR AS POSSIBLE AND END IN STANDARD HOOKS.

WOOD

1. ALL LUMBER AND WOOD PRODUCTS SHALL CONFORM TO B.C.B.C. 2006 PART 9 SECTION 9.3.2 "GRADES", 9.4.1 ''GENERAL DESIGN", 9.4.2 "SNOWLOADS" AND 9.4.3 "DEFLECTIONS".
2. BUILDINGS AND THEIR STRUCTURAL MEMBERS MADE OF WOOD SHALL CONFORM TO CAN3-086 "ENGINEERING DESIGN IN WOOD, (WORKING STRESS DESIGN)", OR CAN/CSA 086.1 "ENGINEERING DESIGN IN WOOD, (LIMIT STATE DESIGN)".
3. WOOD FRAME CONSTRUCTION SHALL CONFORM TO B.C.B.C. 2006 PART 9 SECTION 9.23
4. WOOD TRUSSES SHALL BE DESIGNED, BUILT AND INSTALLED IN CONFORMANCE WITH B.C.B.C. 2006 PART 9 SECTION 9.23.13.11 ''ROOF TRUSSES".

NOTE :
WHERE DETAIL(S) SHOWN ON THE DRAWINGS DIFFER FROM THE DETAILS SHOWN ON THIS SHEET (S1), THEN THE DRAWING HAS PRIORITY.

WHISTLER

PLOT: FULL 1:50 HALF 1:100

FILE: P:\Recdwgs\WHISTLER\179-75-3\STRUCTURAL\179-75-3 S1.dwg Tab Model 11-01-17 richard

AutoCAD DRAWING

REVISIONS	ISSUE	DATE	DRAWN	CHK'D	APP'D	DESCRIPTION	ISSUE	DATE	DRAWN	CHK'D	APP'D	DESCRIPTION
	A	SEP29/08	KS	MR	MR	ISSUED FOR TENDER						
	B	NOV10/08	KS	MR	MR	ISSUED FOR CONSTRUCTION						
	C	JUN03/10	AD	MR	MR	RECORD DRAWING						

DESIGNED MR
DRAWN DBC
CHECKED MR

Dayton & Knight Ltd.
CONSULTING ENGINEERS
#210-889 HARBOURSIDE DR., NORTH VANCOUVER, B.C. V7P 3S1
TEL.: (604) 990-4800 FAX: (604) 990-4805 www.dayton-knight.com

RESORT MUNICIPALITY OF WHISTLER
21 MILE CREEK UV DISINFECTION FACILITY
GENERAL CONSTRUCTION NOTES

SCALE: NONE
DRAWING No. 179.75.3
SHEET No. S1 ISSUE C

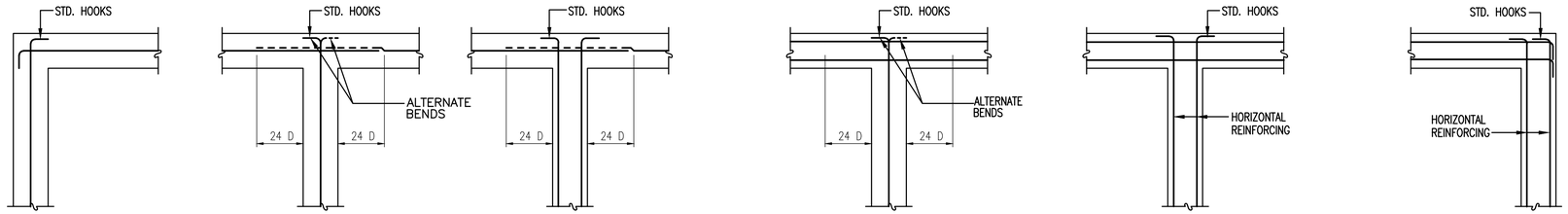

NOTE:
D = DIAMETER OF BAR

TYPICAL HORIZONTAL SECTIONS SHOWING REINFORCING FOR CONCRETE BEAM, SLAB AND WALL INTERSECTIONS AT ENDS

DETAIL A/S2

NOTE :
WHERE DETAIL(S) SHOWN ON THE DRAWINGS DIFFER FROM THE DETAILS SHOWN ON THIS SHEET (S2), THEN THE DRAWING HAS PRIORITY.

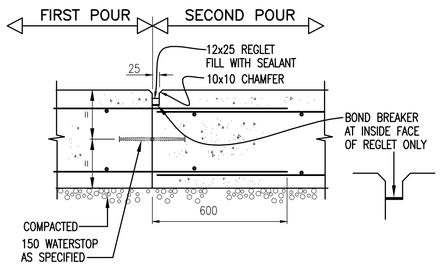

CONSTRUCTION JOINT FOR BASE SLAB FOR WATER AND SEWAGE RETAINING STRUCTURES

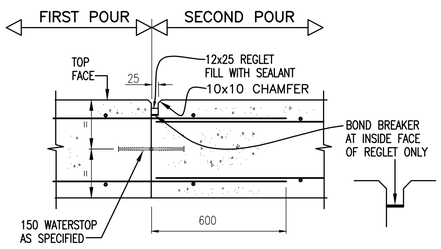

CONSTRUCTION JOINT FOR STRUCTURAL SLAB FOR WATER AND SEWAGE RETAINING STRUCTURES

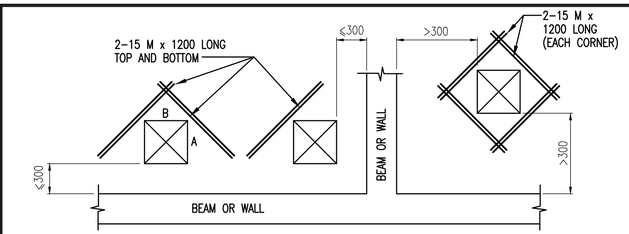

OPENING (A OR B) 150 TO 300

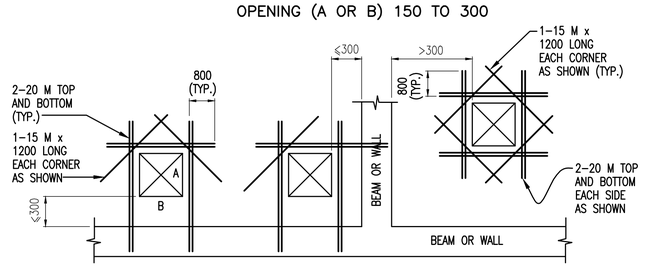

OPENING (A OR B) 300 TO 900

DETAIL C/S2

NOTES :
1. NUMBER OF REINFORCING BARS ARE CUT AT OPENING AND KEPT AT A MINIMUM. AS MANY BARS AS POSSIBLE DEFLECTED AROUND OPENING.
2. REINFORCING BARS ARE KEPT 50 mm CLEAR OF OPENING.
3. CIRCULAR OPENINGS ARE TREATED IN SAME MANNER AS RECTANGULAR ULESS OTHERWISE DETAILED.

ADDITIONAL REINFORCING AROUND OPENING IN CONCRETE SLAB

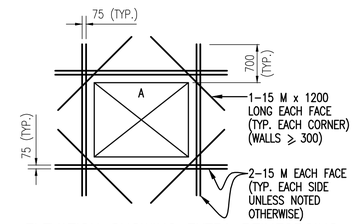

ELEVATION SHOWING EXTRA REINFORCING AROUND WALL OPENING

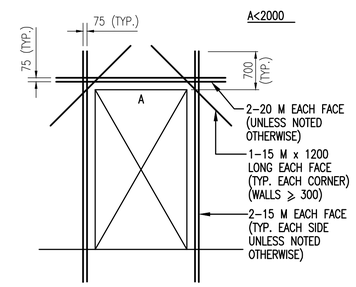

ELEVATION SHOWING EXTRA REINFORCING AROUND DOORWAY

ADDITIONAL REINFORCING AROUND OPENING

DETAIL D/S2

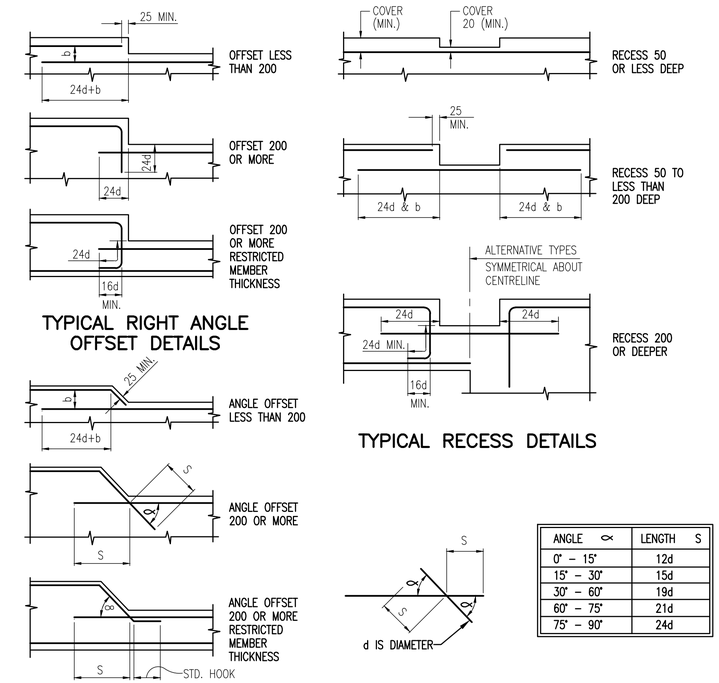

TYPICAL RIGHT ANGLE OFFSET DETAILS

TYPICAL RECESS DETAILS

d IS DIAMETER

ANGLE α	LENGTH S
0° – 15°	12d
15° – 30°	15d
30° – 60°	19d
60° – 75°	21d
75° – 90°	24d

TYPICAL ANGLE OFFSET DETAILS

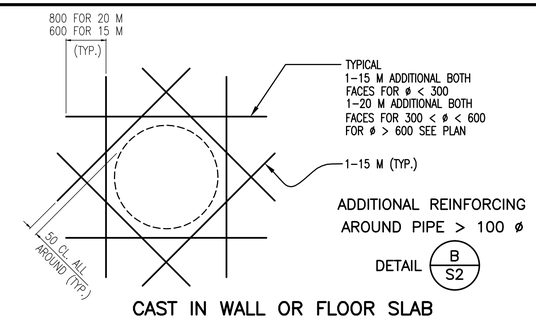

ADDITIONAL REINFORCING AROUND PIPE > 100 ø

DETAIL B/S2

CAST IN WALL OR FLOOR SLAB

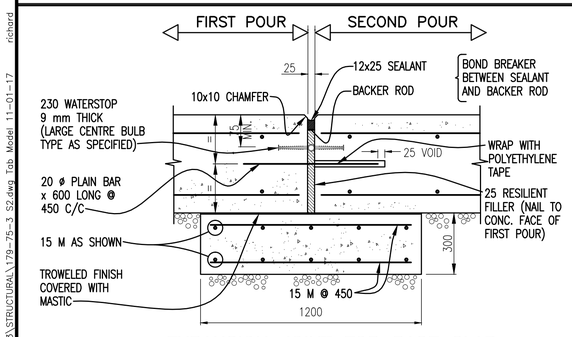

EXPANSION JOINT FOR BASE SLAB FOR WATER AND SEWAGE RETAINING STRUCTURES

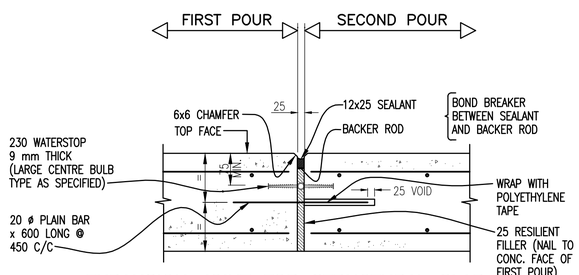

EXPANSION JOINT FOR STRUCTURAL SLAB FOR WATER AND SEWAGE RETAINING STRUCTURES

"These Record Drawings have been prepared based on information provided by the Contractor and others. Dayton & Knight Ltd. has not verified the accuracy or completeness of the information provided to them and does not warrant the accuracy or completeness of these Record Drawings. Users of these Record Drawings assume all risk of loss resulting from their use."

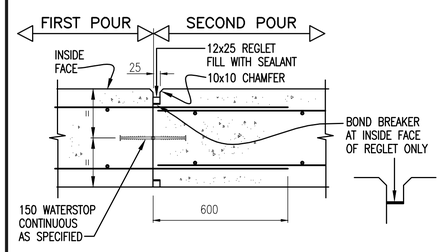

CONSTRUCTION JOINT (VERTICAL) FOR WALL FOR WATER AND SEWAGE RETAINING STRUCTURES

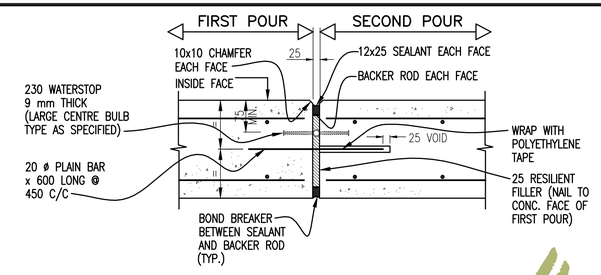

EXPANSION JOINT (VERTICAL) FOR WALL FOR WATER AND SEWAGE RETAINING STRUCTURES

WHISTLER

richard
FILE: P:\Recdwgs\WHISTLER\179-75-3\STRUCTURAL\179-75-3 S2.dwg Tab Model 11-01-17
PLOT: FULL 1:50 HALF 1:100

AutoCAD DRAWING

REVISIONS	ISSUE	DATE	DRAWN	CHK'D	APP'D	DESCRIPTION
	A	SEP29/08	KS	MR	MR	ISSUED FOR TENDER
	B	NOV10/08	KS	MR	MR	ISSUED FOR CONSTRUCTION
	C	JUN03/10	AD	MR	MR	RECORD DRAWING

ISSUE	DATE	DRAWN	CHK'D	APP'D	DESCRIPTION

DESIGNED MR
DRAWN DBC
CHECKED MR

Dayton & Knight Ltd.
CONSULTING ENGINEERS
#210-889 HARBOURSIDE DR., NORTH VANCOUVER, B.C. V7P 3S1
TEL.: (604) 990-4800 FAX: (604) 990-4805 www.dayton-knight.com

RESORT MUNICIPALITY OF WHISTLER
21 MILE CREEK UV DISINFECTION FACILITY
GENERAL STRUCTURAL DETAILS

SCALE: NONE
DRAWING No. 179.75.3
SHEET No. S2 ISSUE C

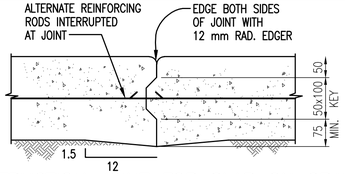

CONSTRUCTION JOINT FOR SLAB ON GRADE
(NON–WATER RETAINING STRUCTURES)

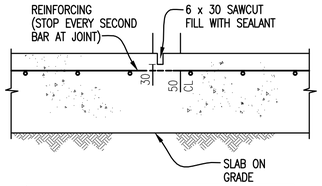

NOTE :
SLAB CONTROL JOINTS @ 5000 ± MAX. FORMING SQUARE PANELS WHEREVER POSSIBLE, OR AS SHOWN ON DRAWINGS

CONTROL JOINT FOR SLAB ON GRADE
(NON–WATER RETAINING STRUCTURES)

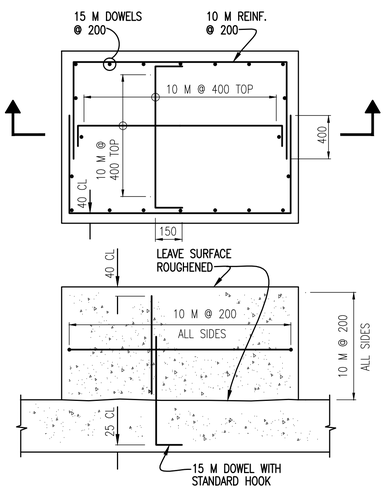

NOTE :
- PADS UNDER 900 HIGH (USE DOWELS FULL HEIGHT)
- PADS OVER 900 HIGH (LAP VERTICAL REINFORCING 400 WITH DOWELS)
- PADS LESS THAN 300 (HOOK DOWELS BOTH ENDS)
- MINIMUM OF 4 DOWELS REQUIRED PER PAD

EQUIPMENT PAD CONSTRUCTION WITH FLOOR SLAB

NOTE :
WHERE DETAIL(S) SHOWN ON THE DRAWINGS DIFFER FROM THE DETAILS SHOWN ON THIS SHEET , THEN THE DRAWING HAS PRIORITY.

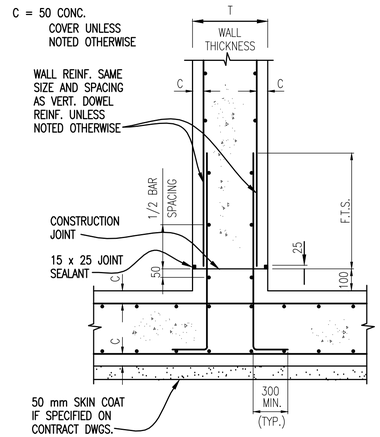

REINFORCING AT BASE SLAB TO WALL
(NON–WATER RETAINING STRUCTURES)

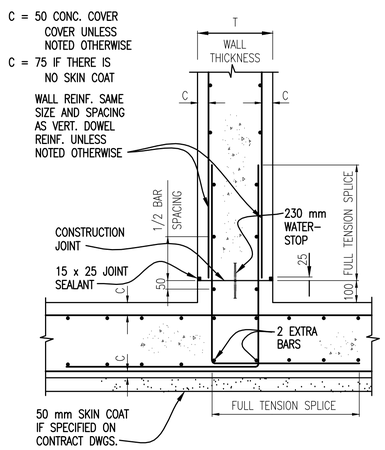

REINFORCING AT BASE SLAB TO WALL
(WATER RETAINING STRUCTURES)

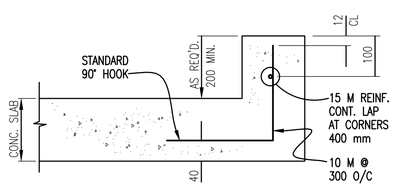

TYPICAL CURB REINFORCING

"These Record Drawings have been prepared based on information provided by the Contractor and others. Dayton & Knight Ltd. has not verified the accuracy or completeness of the information provided to them and does not warrant the accuracy or completeness of these Record Drawings. Users of these Record Drawings assume all risk of loss resulting from their use."

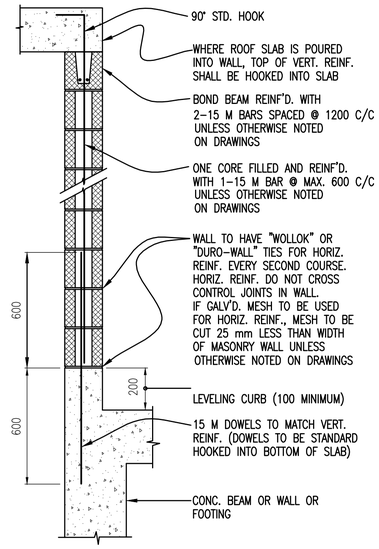

NOTES :
1. LINTEL IS REQUIRED FOR TOP OF OPENING. SEE LINTEL DETAILS.
2. PROVIDE VERTICAL REINFORCING FOR BOTH SIDES OF OPENING IN WALL AND EACH CORNER OF WALLS.
3. PROVIDE BOND BEAM ABOVE AND BELOW OPENINGS IN WALL AND EXTEND BOND BEAM 800 mm BEYOND EDGES.
4. FILL FOR BLOCKS AND BOND BEAMS TO BE 30 MPa CONCRETE.
5. TYPE S MORTAR TO BE USED FOR ALL JOINTS.

TYPICAL MASONRY WALL ANCHORING TO CONCRETE AT BASE STANDARD MASONRY BLOCKS

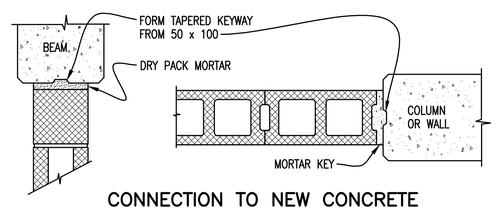

CONNECTION TO NEW CONCRETE STANDARD MASONRY BLOCKS

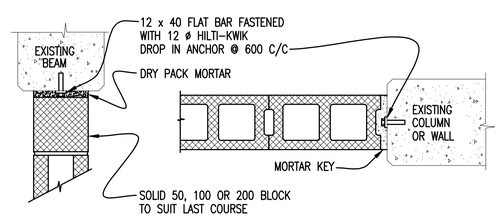

CONNECTION TO EXISTING CONCRETE

STANDARD MASONRY BLOCKS

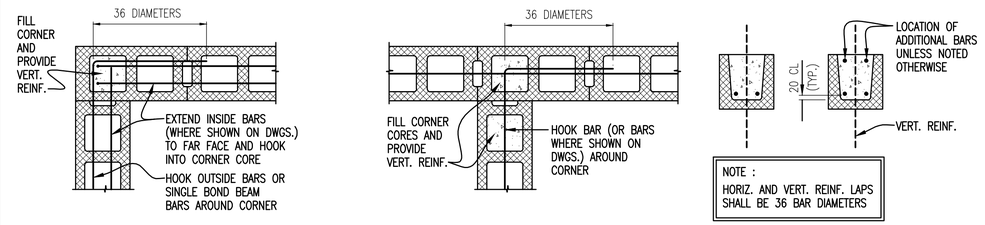

EXTERIOR BOND BEAM — INTERIOR BOND BEAM — TYPICAL HORIZONTAL BOND BEAMS

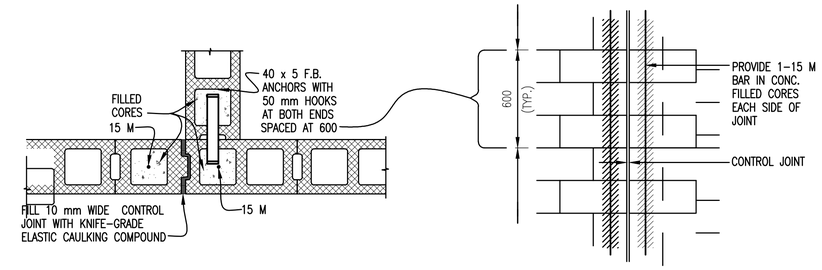

CONTROL JOINT BLOCKS AND ANCHORS — ELEVATION

CONNECTION AND CONTROL JOINTS STANDARD MASONRY BLOCKS

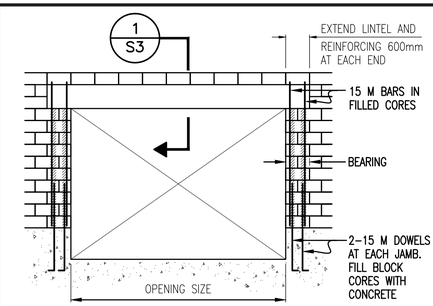

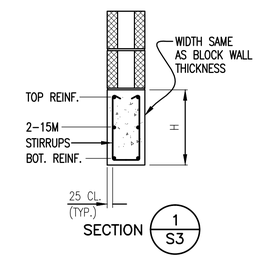

NOTES :
1. EXTEND LINTEL AND REINFORCING 400mm AT EACH END.
2. COMPRESSIVE STRENGTH OF CONCRETE TO BE 30 MPa.
3. FOR BOTTOM REINFORCING USE BAR SPACER WHEN 3 OR 4 BARS REQUIRED.

OPENING SIZE	H	BOTTOM REINF.	TOP REINF.	STIRRUPS	BEARING
2400 TO 3000	400	3–20 M	2–15 M	10 M @ 300 C/C	400
3000 TO 3600	400	2–25 M	2–15 M	10 M @ 300 C/C	400
3600 TO 4200	600	2–25 M + 1–20 M	2–15 M	10 M @ 250 C/C	400
4200 TO 4800	600	2–25 M + 2–20 M	2–20 M	10 M @ 200 C/C	400

POURED CONCRETE LINTEL IN BLOCK WALL

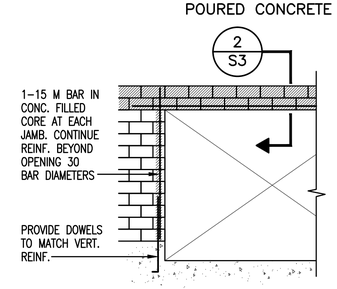

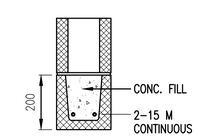

CLEAR SPAN < 1800
SECTION 2/S3

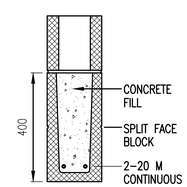

CLEAR SPAN > 1800 < 2400
SECTION 2/S3

NOTES :
1. PROVIDE MIN. 400 mm BEARING EACH END OF LINTELS. FILL CORES WITH CONCRETE AND 1–15 M BAR VERTICAL TO EACH END.
2. ALL CONCRETE FILL TO BE 30 MPa.

LINTEL DETAILS – STANDARD MASONRY BLOCKS

NOTE : FOR GIANT BRICK, USE SAME MASONRY DETAILS

WHISTLER

PLOT: FULL 1:50 HALF 1:100

FILE: P:\Recdwgs\WHISTLER\179-75-3\STRUCTURAL\179-75-3 S3.dwg Tab: Model 11-01-17 richard

AutoCAD DRAWING

REVISIONS

ISSUE	DATE	DRAWN	CHK'D	APP'D	DESCRIPTION	ISSUE	DATE	DRAWN	CHK'D	APP'D	DESCRIPTION
A	SEP29/08	KS	MR	MR	ISSUED FOR TENDER						
B	NOV10/08	KS	MR	MR	ISSUED FOR CONSTRUCTION						
C	JUN03/10	AD	MR	MR	RECORD DRAWING						

DESIGNED MR
DRAWN DBC
CHECKED MR

Dayton & Knight Ltd.
CONSULTING ENGINEERS
#210-889 HARBOURSIDE DR., NORTH VANCOUVER, B.C. V7P 3S1
TEL.: (604) 990-4800 FAX: (604) 990-4805 www.dayton-knight.com

RESORT MUNICIPALITY OF WHISTLER
21 MILE CREEK UV DISINFECTION FACILITY
GENERAL STRUCTURAL AND MASONRY DETAILS

SCALE: NONE
DRAWING No. 179.75.3
SHEET No. S3 ISSUE C

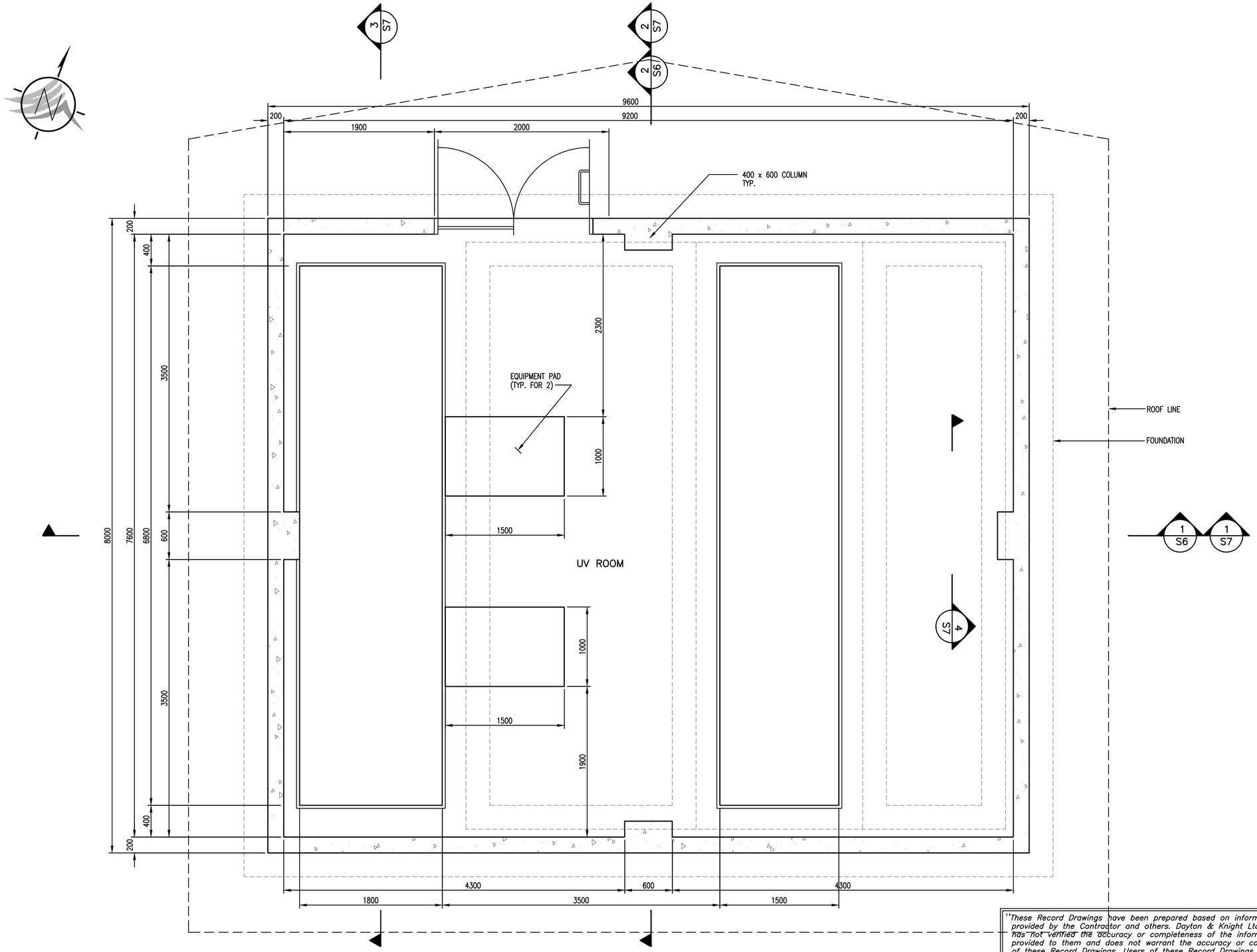

FLOOR PLAN @ EL. 679.50
1:25

"These Record Drawings have been prepared based on information provided by the Contractor and others. Dayton & Knight Ltd. has not verified the accuracy or completeness of the information provided to them and does not warrant the accuracy or completeness of these Record Drawings. Users of these Record Drawings assume all risk of loss resulting from their use."

WHISTLER

PLOT: FULL 1:50 HALF 1:100

FILE: P:\Recdwgs\WHISTLER\179-75-3\STRUCTURAL\179-75-3 S4.dwg Tab S4 11-01-17 richard

AutoCAD DRAWING

REVISIONS

ISSUE	DATE	DRAWN	CHK'D	APP'D	DESCRIPTION	ISSUE	DATE	DRAWN	CHK'D	APP'D	DESCRIPTION
A	SEP29/08	KS	MR	MR	ISSUED FOR TENDER	D	NOV10/08	KS	MR	MR	ISSUED FOR CONSTRUCTION
B	OCT14/08	DBC	MR	MR	1 ADDENDUM No.1	E	JUN03/10	AD	MR	MR	RECORD DRAWING
C	OCT20/08	KS	MR	MR	2 ADDENDUM No.2						

DESIGNED MR
DRAWN KS
CHECKED MR

Dayton & Knight Ltd.
CONSULTING ENGINEERS
#210-889 HARBOURSIDE DR., NORTH VANCOUVER, B.C. V7P 3S1
TEL.: (604) 990-4800 FAX: (604) 990-4805 www.dayton-knight.com

RESORT MUNICIPALITY OF WHISTLER
21 MILE CREEK UV DISINFECTION FACILITY
STRUCTURAL – FLOOR PLAN @ EL. 679.50

SCALE: AS SHOWN
DRAWING No. 179.75.3
SHEET No. S4 ISSUE E

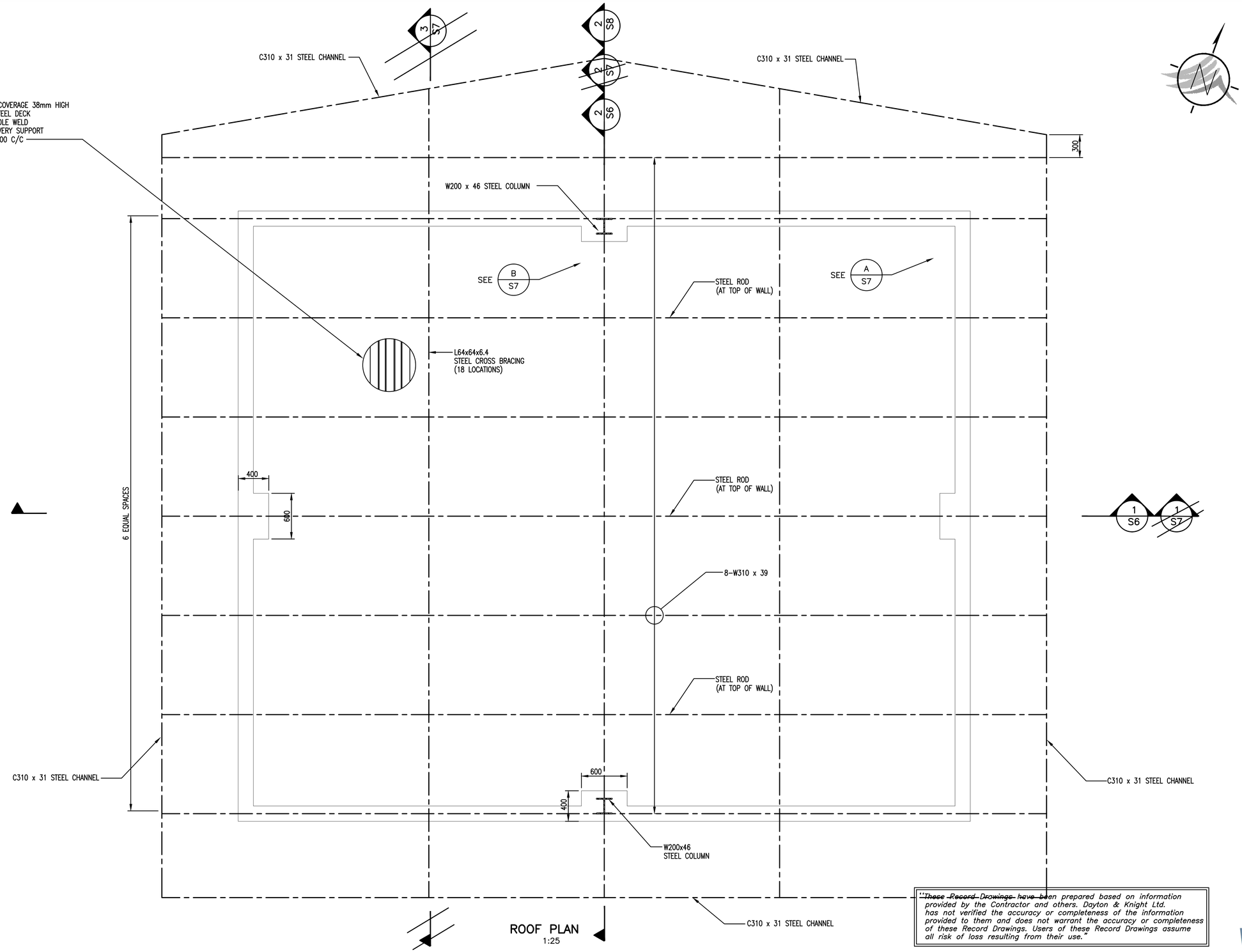

ROOF PLAN
1:25

"These Record Drawings have been prepared based on information provided by the Contractor and others. Dayton & Knight Ltd. has not verified the accuracy or completeness of the information provided to them and does not warrant the accuracy or completeness of these Record Drawings. Users of these Record Drawings assume all risk of loss resulting from their use."

WHISTLER

PLOT: FULL 1:50 HALF 1:100

FILE: P:\Recdwgs\WHISTLER\179-75-3\STRUCTURAL\179-75-3 S5.dwg Tab S5 11-01-17 richard

AutoCAD DRAWING

REVISIONS

ISSUE	DATE	DRAWN	CHK'D	APP'D	DESCRIPTION	ISSUE	DATE	DRAWN	CHK'D	APP'D	DESCRIPTION
A	SEP29/08	KS	MR	MR	ISSUED FOR TENDER	D	NOV10/08	KS	MR	MR	ISSUED FOR CONSTRUCTION
B	OCT14/08	DBC	MR	MR	1 ADDENDUM NO.1	E	JUN03/10	AD	MR	MR	RECORD DRAWING
C	OCT20/08	KS	MR	MR	2 ADDENDUM No.2						

DESIGNED MR
DRAWN KS
CHECKED MR

Dayton & Knight Ltd.
CONSULTING ENGINEERS
#210-889 HARBOURSIDE DR., NORTH VANCOUVER, B.C. V7P 3S1
TEL.: (604) 990-4800 FAX: (604) 990-4805 www.dayton-knight.com

RESORT MUNICIPALITY OF WHISTLER
21 MILE CREEK UV DISINFECTION FACILITY
STRUCTURAL – ROOF PLAN

SCALE: AS SHOWN
DRAWING No. 179.75.3
SHEET No. S5 ISSUE E

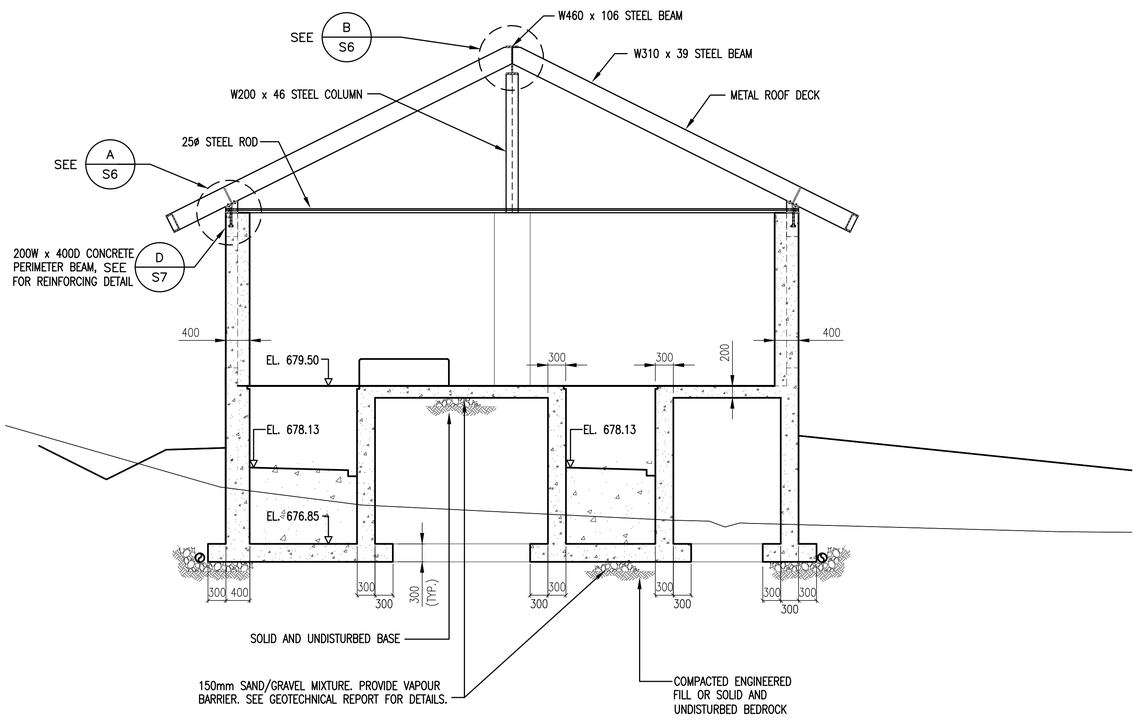

SECTION 1/S4
1:50

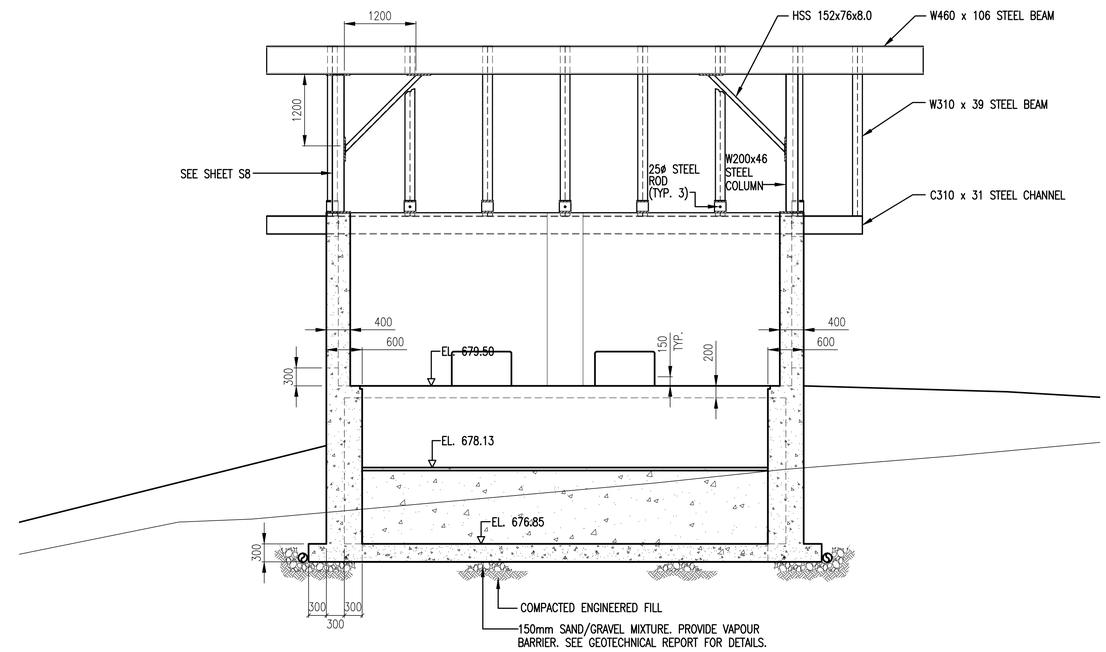

SECTION 2/S4
1:50

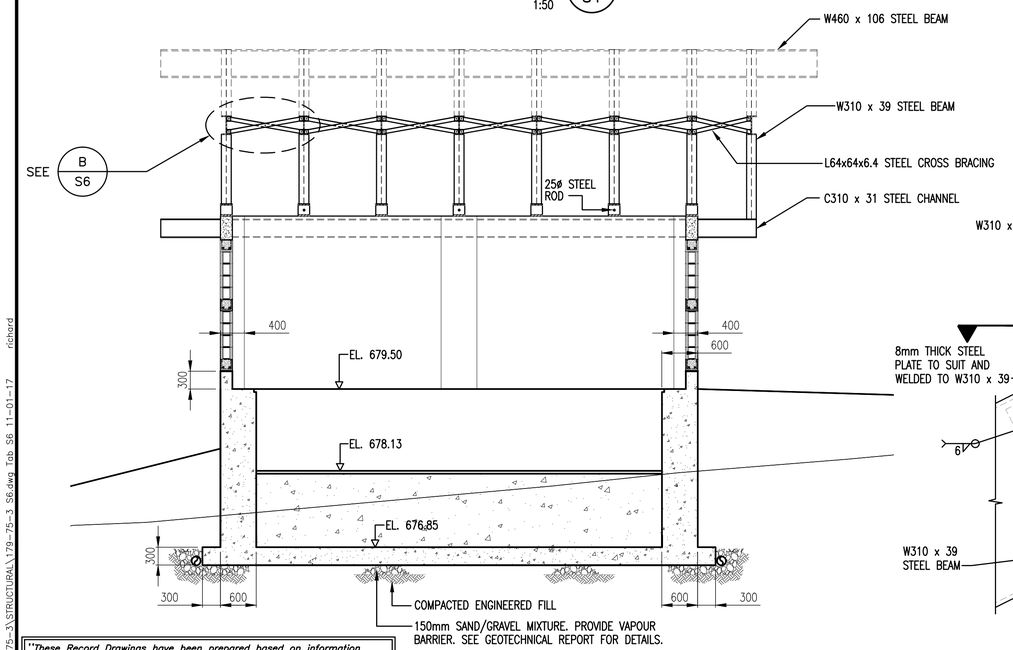

SECTION 3/S4
1:50

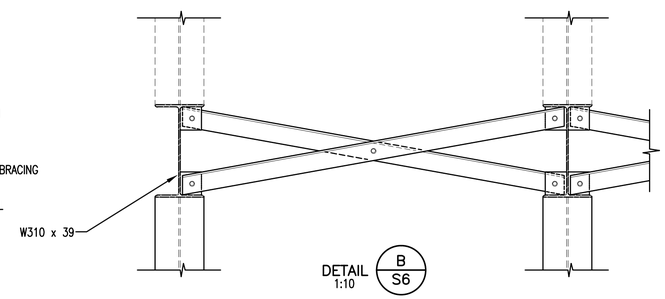

DETAIL B/S6
1:10

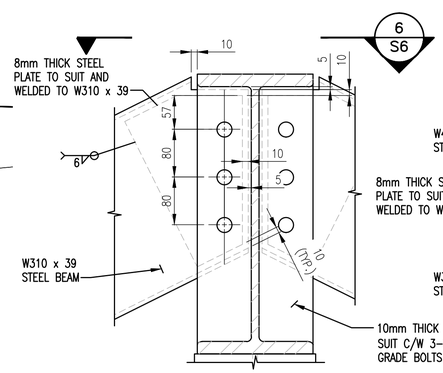

DETAIL B/S6
1:5

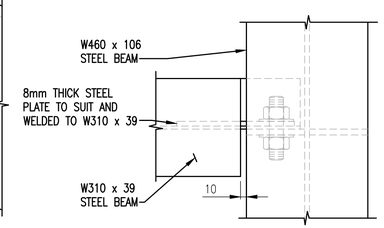

SECTION 6/S6
1:5

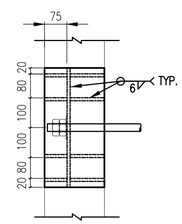

SECTION 5/S6
1:10

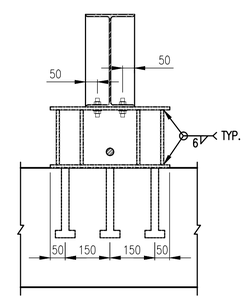

SECTION 4/S6
1:10

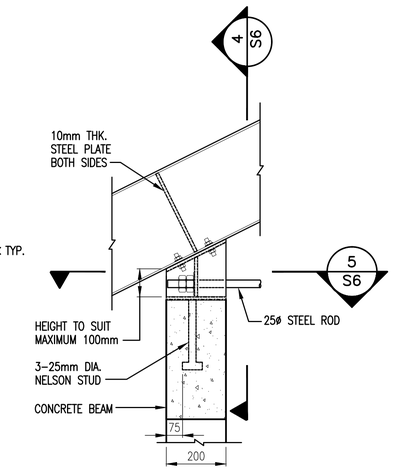

DETAIL A/S6
1:10

NOTES:

1. ALL BOLTS ARE 20mm DIA. A325 GRADE AND WITH WASHERS AND NUTS, UNLESS OTHERWISE NOTED.
2. ALL STEEL PLATES ARE 16mm THK. G40.21 W 300W GRADE, UNLESS OTHERWISE NOTED.
3. AL WELD SHALL BE 6 TYP. UNLESS OTHERWISE NOTED.

WHISTLER

"These Record Drawings have been prepared based on information provided by the Contractor and others. Dayton & Knight Ltd. has not verified the accuracy or completeness of the information provided to them and does not warrant the accuracy or completeness of these Record Drawings. Users of these Record Drawings assume all risk of loss resulting from their use."

PLOT: FULL 1:50 HALF 1:100

FILE: P:\Recdwgs\WHISTLER\179-75-3\STRUCTURAL\179-75-3 S6.dwg Tab S6 11-01-17 richard

AutoCAD DRAWING

REVISIONS

ISSUE	DATE	DRAWN	CHK'D	APP'D	DESCRIPTION	ISSUE	DATE	DRAWN	CHK'D	APP'D	DESCRIPTION
A	SEP29/08	KS	MR	MR	ISSUED FOR TENDER	D	NOV10/08	KS	MR	MR	ISSUED FOR CONSTRUCTION
B	OCT14/08	DBC	MR	MR	1 ADDENDUM No.1	E	JUN03/10	AD	MR	MR	RECORD DRAWING
C	OCT21/08	RB	MR	MR	ADDENDUM No.2 2						

DESIGNED MR
DRAWN KS
CHECKED MR

Dayton & Knight Ltd.
CONSULTING ENGINEERS
#210-889 HARBOURSIDE DR., NORTH VANCOUVER, B.C. V7P 3S1
TEL.: (604) 990-4800 FAX: (604) 990-4805 www.dayton-knight.com

RESORT MUNICIPALITY OF WHISTLER
21 MILE CREEK UV DISINFECTION FACILITY
STRUCTURAL – SECTIONS

SCALE: AS SHOWN
DRAWING No. 179.75.3
SHEET No. S6 ISSUE E

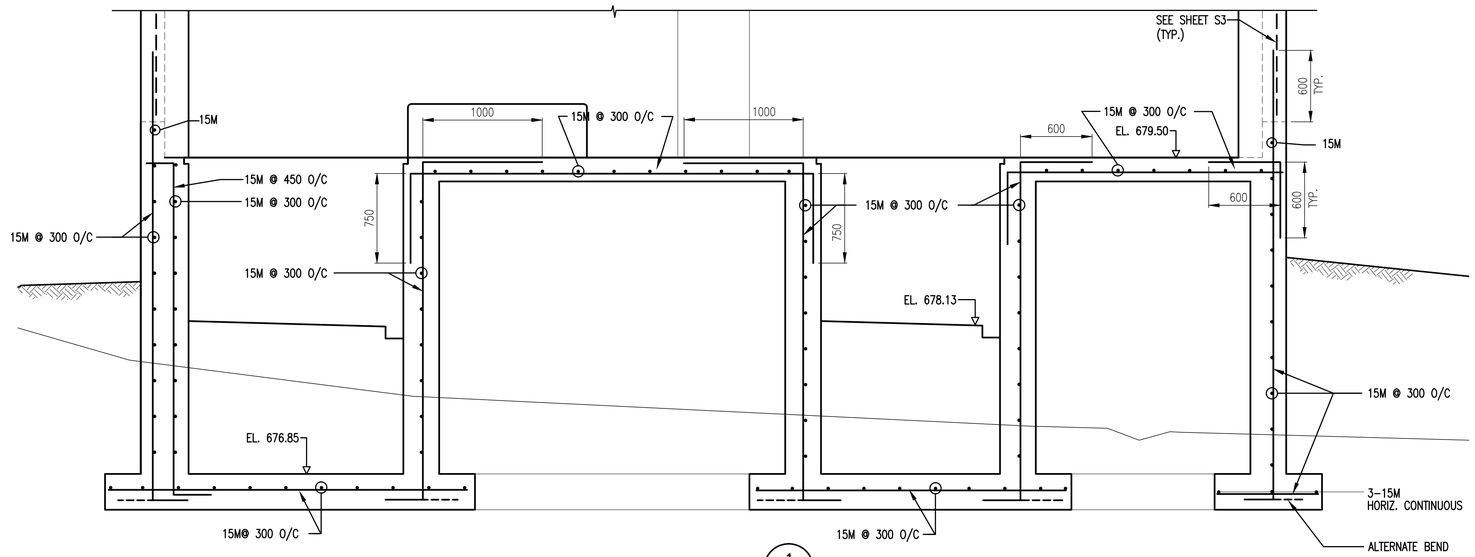

SECTION 1/S4 1:25

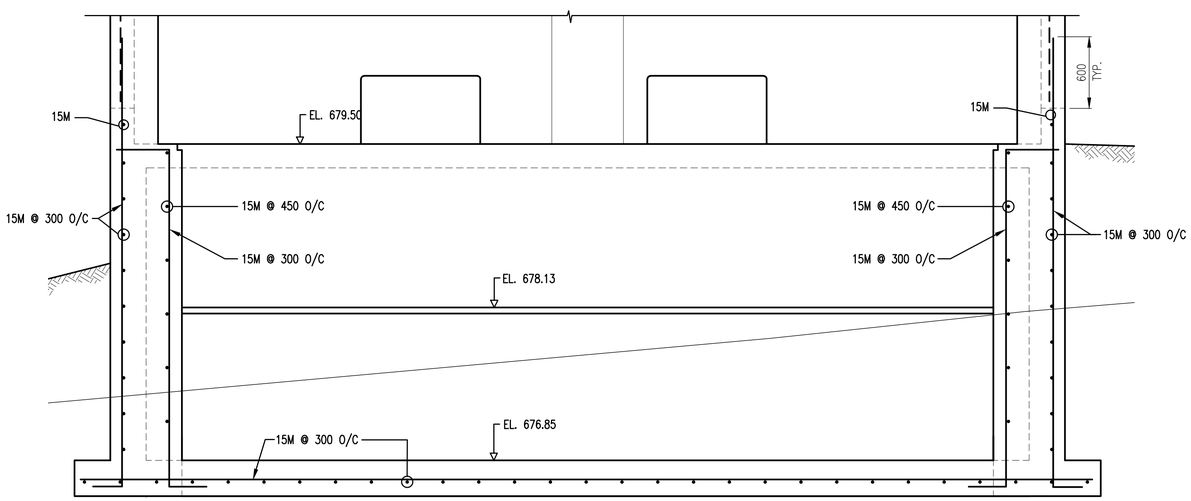

SECTION 3/S4 1:25

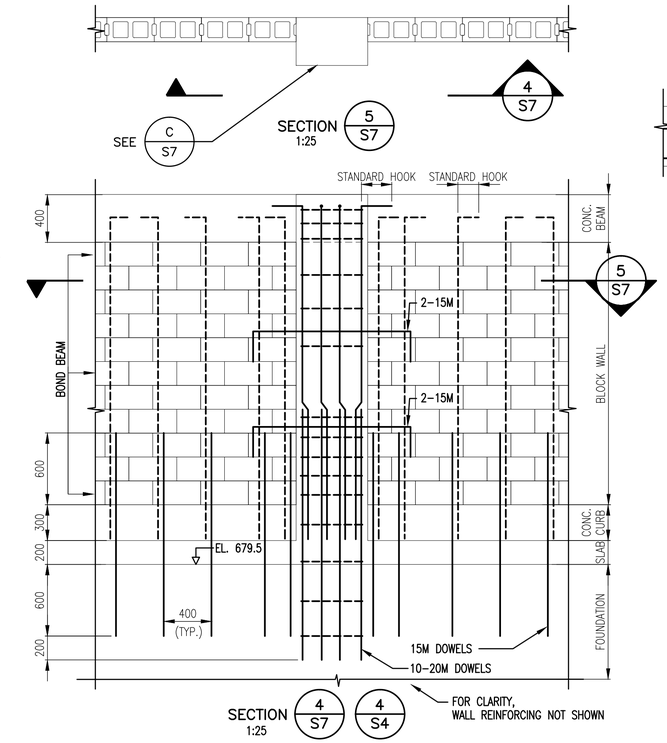

SECTION 4/S7 4/S4 1:25

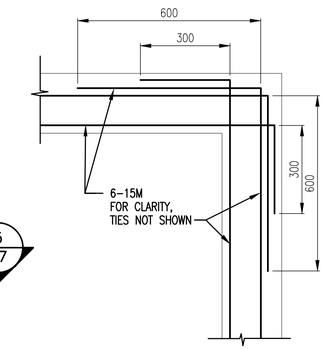

PLAN VIEW OF REINFORCING AT BEAM CORNER

DETAIL A/S7 1:10

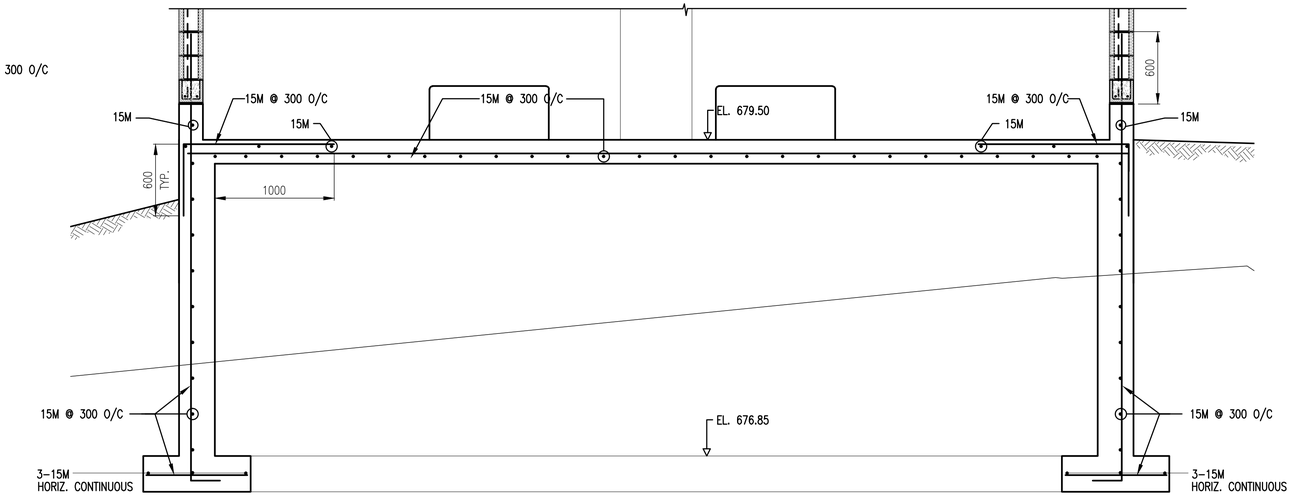

SECTION 2/S4 1:25

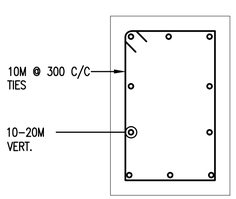

REINFORCING FOR CONCRETE COLUMN 400x 600

DETAIL C/S6 1:10

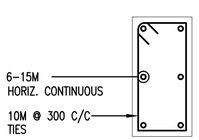

REINFORCING FOR PERIMETER CONCRETE BEAM 200W x 400D

DETAIL B/S5 1:10

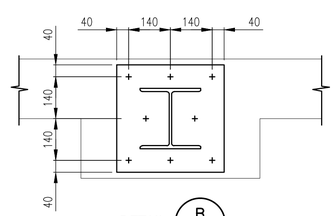

DETAIL B/S5 1:10

"These Record Drawings have been prepared based on information provided by the Contractor and others. Dayton & Knight Ltd. has not verified the accuracy or completeness of the information provided to them and does not warrant the accuracy or completeness of these Record Drawings. Users of these Record Drawings assume all risk of loss resulting from their use."

WHISTLER

PLOT: FULL 1:50 HALF 1:100

FILE: P:\Recdwgs\WHISTLER\179-75-3\STRUCTURAL\179-75-3 S7.dwg Tab S7 11-01-17 richard

AutoCAD DRAWING

REVISIONS	ISSUE	DATE	DRAWN	CHK'D	APP'D	DESCRIPTION	ISSUE	DATE	DRAWN	CHK'D	APP'D	DESCRIPTION
	A	SEP29/08	KS	MR	MR	ISSUED FOR TENDER	D	NOV10/08	KS	MR	MR	ISSUED FOR CONSTRUCTION
	B	OCT14/08	DBC	MR	MR	1 ADDENDUM No.1	E	JUN03/10	AD	MR	MR	RECORD DRAWING
	C	OCT20/08	KS	MR	MR	2 ADDENDUM No.2						

DESIGNED MR
DRAWN KS
CHECKED MR

Dayton & Knight Ltd.
CONSULTING ENGINEERS
#210-889 HARBOURSIDE DR., NORTH VANCOUVER, B.C. V7P 3S1
TEL.: (604) 990-4800 FAX: (604) 990-4805 www.dayton-knight.com

RESORT MUNICIPALITY OF WHISTLER
21 MILE CREEK UV DISINFECTION FACILITY
REINFORCING – SECTIONS

SCALE: AS SHOWN
DRAWING No. 179.75.3
SHEET No. S7 ISSUE E

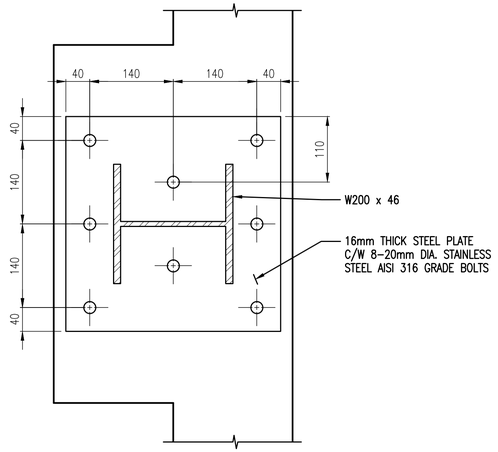

SECTION 3/S8
1:50

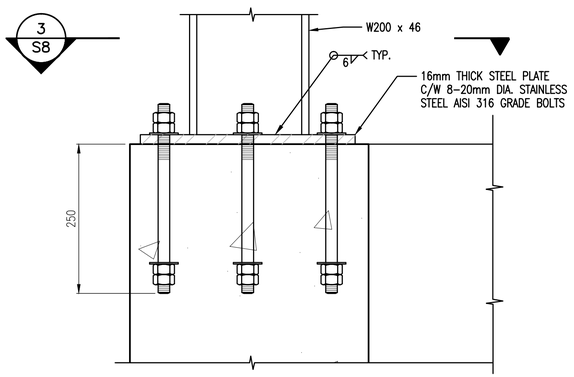

DETAIL A/S8
1:5

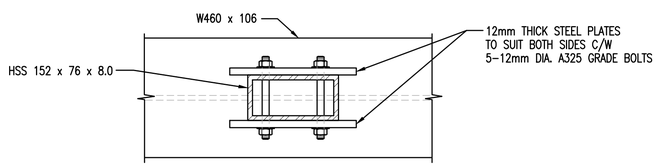

SECTION 5/S8
1:50

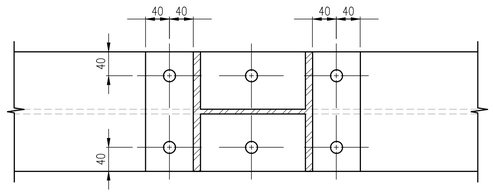

SECTION 4/S8
1:50

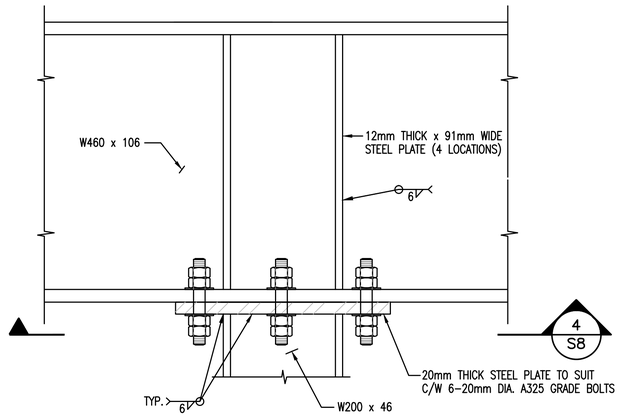

DETAIL B/S8
1:5

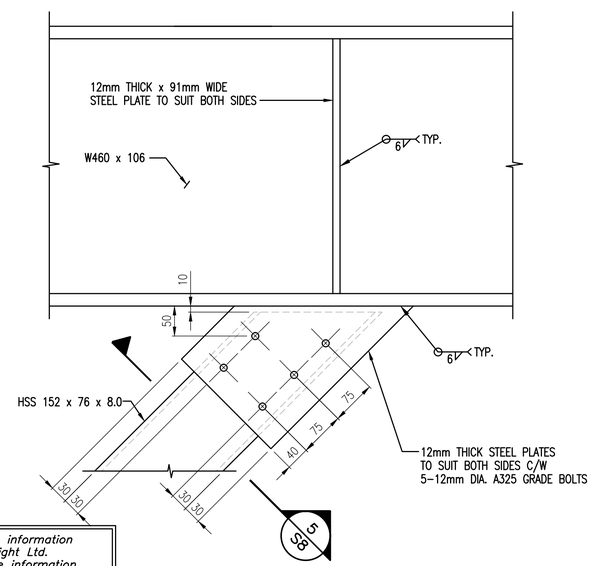

DETAIL C/S8
1:5

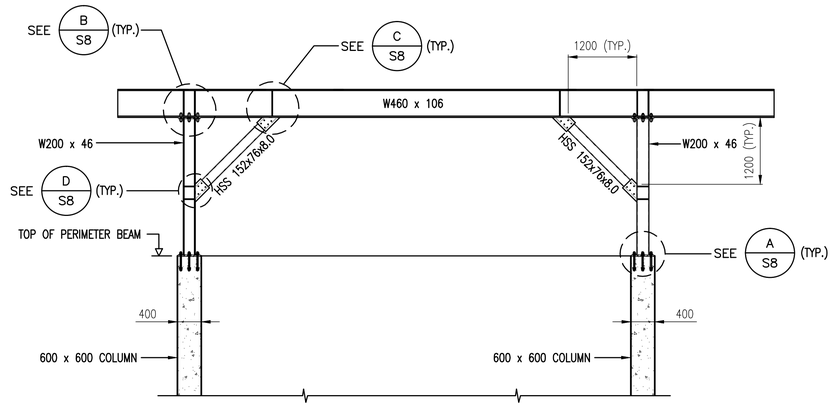

SECTION 2/S5
1:50

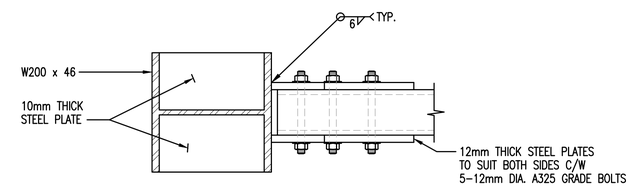

SECTION 6/S8
1:50

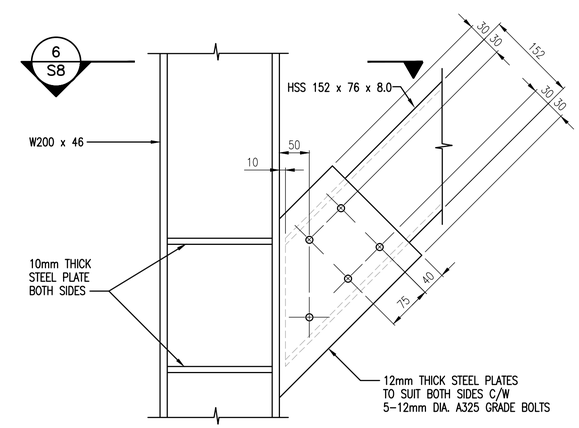

DETAIL D/S8
1:5

"These Record Drawings have been prepared based on information provided by the Contractor and others. Dayton & Knight Ltd. has not verified the accuracy or completeness of the information provided to them and does not warrant the accuracy or completeness of these Record Drawings. Users of these Record Drawings assume all risk of loss resulting from their use."

WHISTLER

PLOT: FULL 1:50 HALF 1:100

FILE: P:\Recdwgs\WHISTLER\179-75-3\STRUCTURAL\179-75-3 S8.dwg Tab S8 11-01-17 richard

AutoCAD DRAWING

REVISIONS

ISSUE	DATE	DRAWN	CHK'D	APP'D	DESCRIPTION	ISSUE	DATE	DRAWN	CHK'D	APP'D	DESCRIPTION
B	OCT21/08	RB	MR	MR	ADDENDUM No.2						
C	NOV10/08	KS	MR	MR	ISSUED FOR CONSTRUCTION						
D	JUN03/10	AD	MR	MR	RECORD DRAWING						

DESIGNED MR
DRAWN RB
CHECKED MR

Dayton & Knight Ltd.
CONSULTING ENGINEERS
#210-889 HARBOURSIDE DR., NORTH VANCOUVER, B.C. V7P 3S1
TEL.: (604) 990-4800 FAX: (604) 990-4805 www.dayton-knight.com

RESORT MUNICIPALITY OF WHISTLER
21 MILE CREEK UV DISINFECTION FACILITY
STRUCTURAL – STEEL CONNECTION DETAILS

SCALE: AS SHOWN
DRAWING No. 179.75.3
SHEET No. S8 ISSUE D

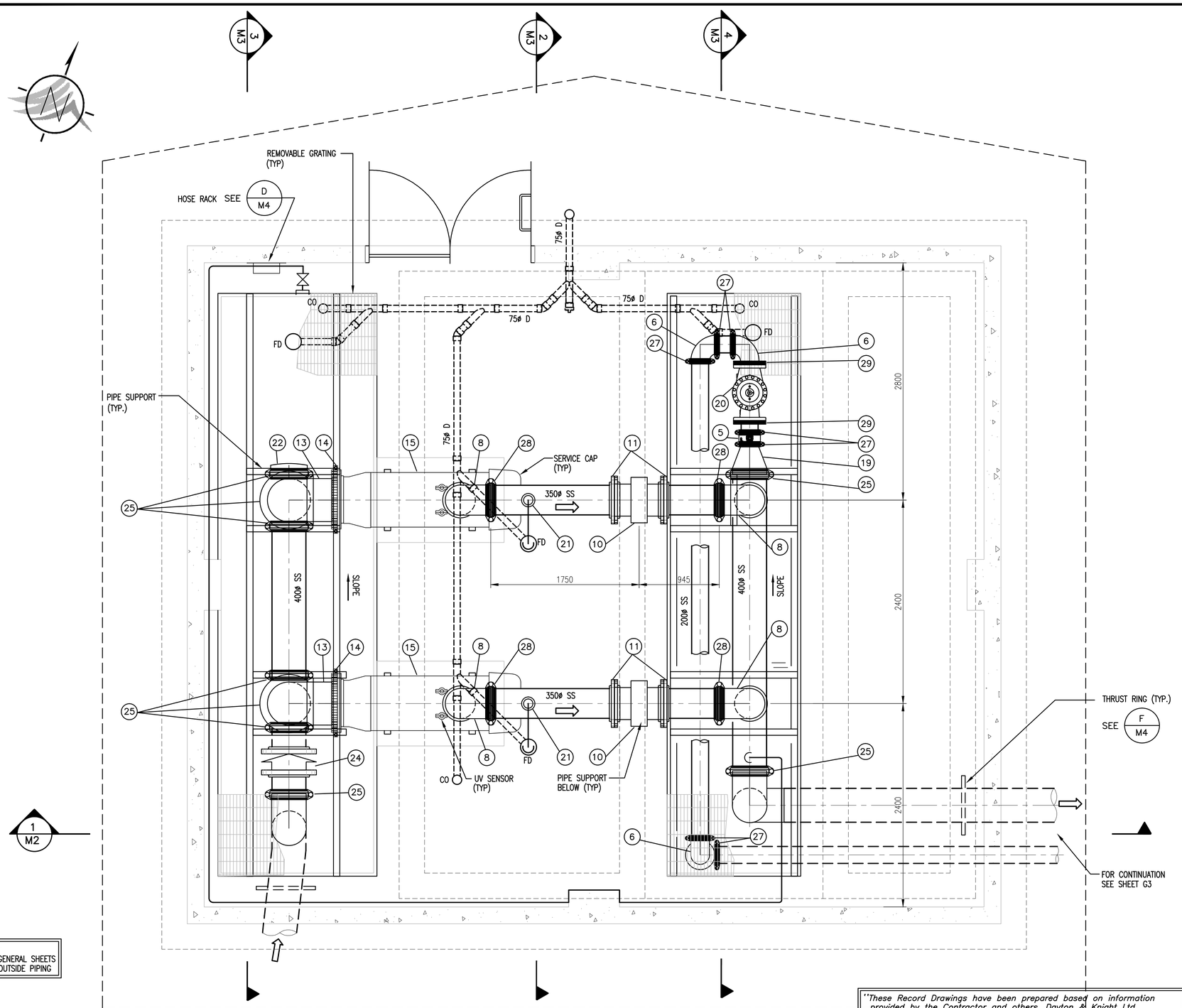

NOTE:
SEE GENERAL SHEETS FOR OUTSIDE PIPING

FLOOR PLAN @ EL. 679.50

1:25

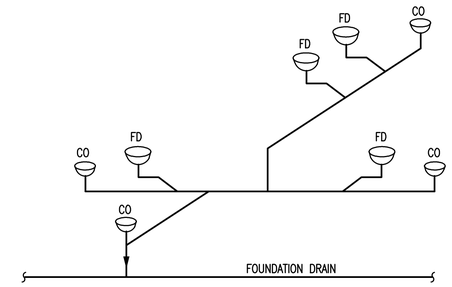

FLOOR DRAINAGE SCHEMATIC

N.T.S.

1. *The information in this drawing is confidential and is intended for the recipient(s) only. No other party is entitled to use or receive it. Do not redistribute. No warranty of any type is implied by provision of information through attachment of digital files.*
2. *This drawing is for general information only and may not be accurate or complete in all respects. Dayton & Knight Ltd. does not assume any responsibility for errors and/or omissions.*
3. *It is the Contractors sole responsibility to check the accuracy of the digital drawings.*

BILL OF MAJOR MATERIAL

ITEM	DESCRIPTION
1	400 x 400 x 400 VIC. NO. W20 SS TEE
2	400 x 350 VIC. NO. W50 SS CONCENTRIC REDUCER
3	350 BUTTERFLY VALVE C/W ROTORK ACTUATOR
4	350 x 350 x 200 VIC. NO. 25 SS TEE
5	200 VIC–300 BUTTERFLY VALVE
6	200 VIC. NO. W10 SS SR BEND
7	200 x 200 x 200 VIC. NO. 20 SS TEE
8	350 VIC. NO. W10 SS SR BEND
9	350 BUTTERFLY VALVE VIC–300 AGS
10	350 FLANGED MAGNETIC FLOWMETER
11	350 VIC. NO. 741 FLANGE ADAPTER
12	500 x 250 VIC. NO. W50 SS CONCENTRIC REDUCER
13	500 VIC. NO. W10 SS SR BEND
14	500 VIC. NO. 741 FLANGE ADAPTER
15	UV REACTOR(SUPPLIED BY OTHERS)
16	500 x 300 VIC. NO. W50 SS CONCENTRIC REDUCER
17	400 BUTTERFLY VALVE VIC–300 AGS C/W NUT
18	400 VIC. NO. W10 SS SR BEND
19	400 x 200 VIC. NO. W51 SS ECCENTRIC REDUCER
20	200 PRESSURE RELIEF VALVE
21	AUTOMATIC AIR RELIEF VALVE (50mm)
22	400 VIC. NO. W60 CAP
24	400 CHECK VALVE
25	400 VIC. NO. 89 RIGID COUPLING
26	500 VIC. NO. 89 RIGID COUPLING
27	200 VIC. NO. 89 RIGID COUPLING
28	350 VIC NO. 89 RIGID COUPLING
29	200ø VIC. NO. 741 FLANGE ADAPTER

"These Record Drawings have been prepared based on information provided by the Contractor and others. Dayton & Knight Ltd. has not verified the accuracy or completeness of the information provided to them and does not warrant the accuracy or completeness of these Record Drawings. Users of these Record Drawings assume all risk of loss resulting from their use."

WHISTLER

PLOT: FULL 1:50 HALF 1:100

FILE: P:\Recdwgs\WHISTLER\179-75-3\MECHANICAL\179-75-3 M1.dwg Tab M1 11-01-17 richard

AutoCAD DRAWING

REVISIONS

ISSUE	DATE	DRAWN	CHK'D	APP'D	DESCRIPTION	ISSUE	DATE	DRAWN	CHK'D	APP'D	DESCRIPTION
A	SEP29/08	KS	EP	EP	1 ISSUED FOR TENDER	D	NOV10/08	KS	EP	EP	ISSUED FOR CONSTRUCTION
B	OCT14/08	KS	EP	EP	1 ADDENDUM No.1	E	JUN3/10	AD	EP	EP	RECORD DRAWING
C	OCT20/08	KS	EP	EP	2 ADDENDUM No.2						

DESIGNED EP
DRAWN KS
CHECKED EP

Dayton & Knight Ltd.
CONSULTING ENGINEERS
#210-869 HARBOURSIDE DR., NORTH VANCOUVER, B.C. V7P 3S1
TEL.: (604) 990-4800 FAX: (604) 990-4805 www.dayton-knight.com

RESORT MUNICIPALITY OF WHISTLER
21 MILE CREEK UV DISINFECTION FACILITY
MECHANICAL – PLAN

SCALE: AS SHOWN
DRAWING No. 179.75.3
SHEET No. M1 ISSUE E

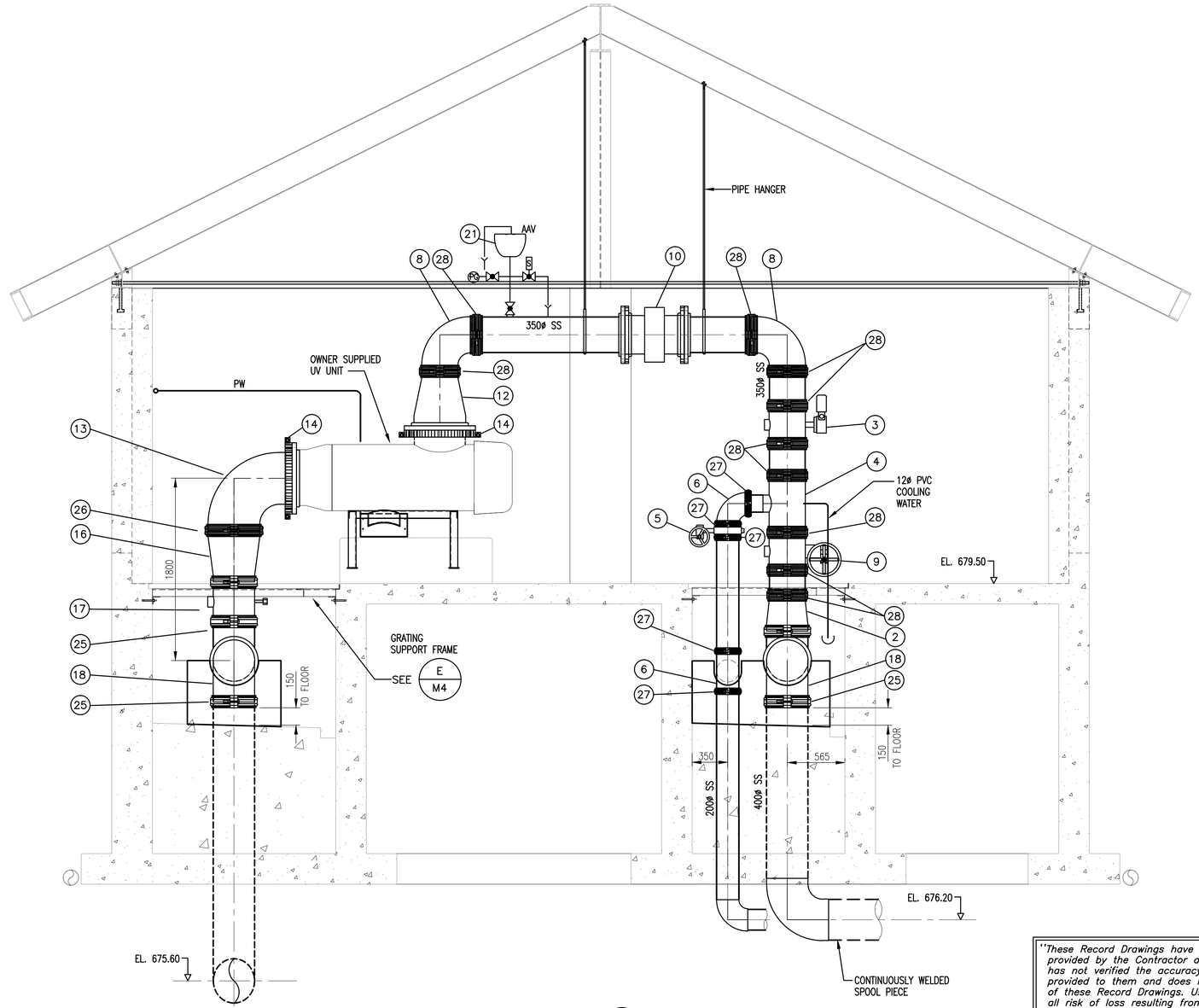

SECTION 1/M1
1:25

"These Record Drawings have been prepared based on information provided by the Contractor and others. Dayton & Knight Ltd. has not verified the accuracy or completeness of the information provided to them and does not warrant the accuracy or completeness of these Record Drawings. Users of these Record Drawings assume all risk of loss resulting from their use."

1. The information in this drawing is confidential and is intended for the recipient(s) only. No other party is entitled to use or receive it. Do not redistribute. No warranty of any type is implied by provision of information through attachment of digital files.
2. This drawing is for general information only and may not be accurate or complete in all respects. Dayton & Knight Ltd. does not assume any responsibility for errors and/or omissions.
3. It is the Contractors sole responsibility to check the accuracy of the digital drawings.

WHISTLER

PLOT: FULL 1:50 HALF 1:100

FILE: P:\Recdwgs\WHISTLER\179-75-3\MECHANICAL\179-75-3_M2.dwg Tab: M2 11-01-17 richard

AutoCAD DRAWING

REVISIONS	ISSUE	DATE	DRAWN	CHK'D	APP'D	DESCRIPTION	ISSUE	DATE	DRAWN	CHK'D	APP'D	DESCRIPTION
	A	SEP29/08	KS	EP	EP	ISSUED FOR TENDER						
	B	NOV10/08	KS	EP	EP	ISSUED FOR CONSTRUCTION						
	C	JUN03/10	AD	EP	EP	RECORD DRAWING						

DESIGNED EP
DRAWN KS
CHECKED EP

Dayton & Knight Ltd.
CONSULTING ENGINEERS
#210-869 HARBOURSIDE DR., NORTH VANCOUVER, B.C. V7P 3S1
TEL.: (604) 990-4800 FAX: (604) 990-4805 www.dayton-knight.com

RESORT MUNICIPALITY OF WHISTLER
21 MILE CREEK UV DISINFECTION FACILITY
MECHANICAL – SECTION

SCALE: AS SHOWN
DRAWING No. 179.75.3
SHEET No. M2 ISSUE C

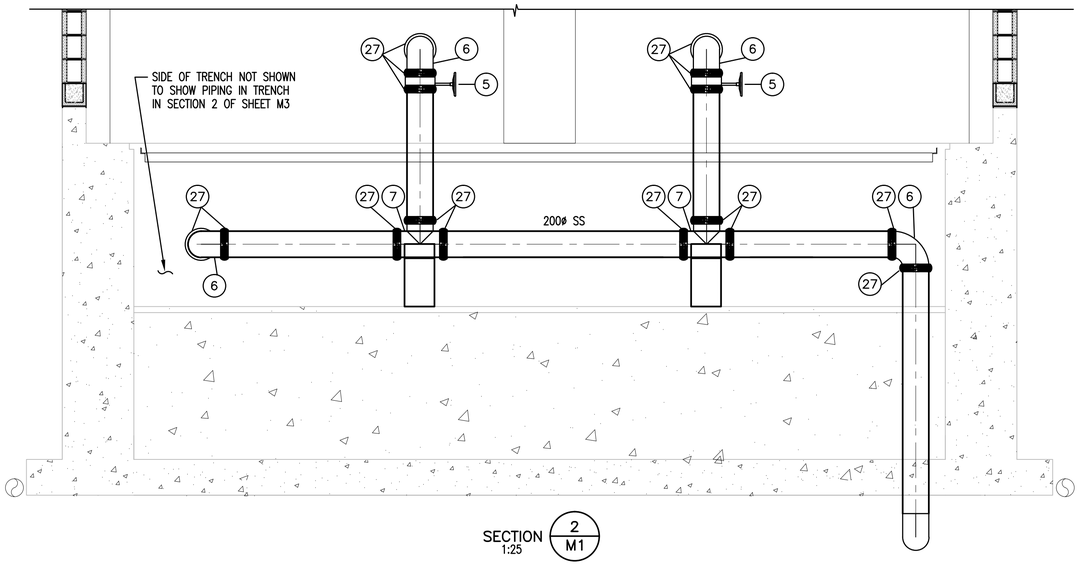

SECTION 2/M1
1:25

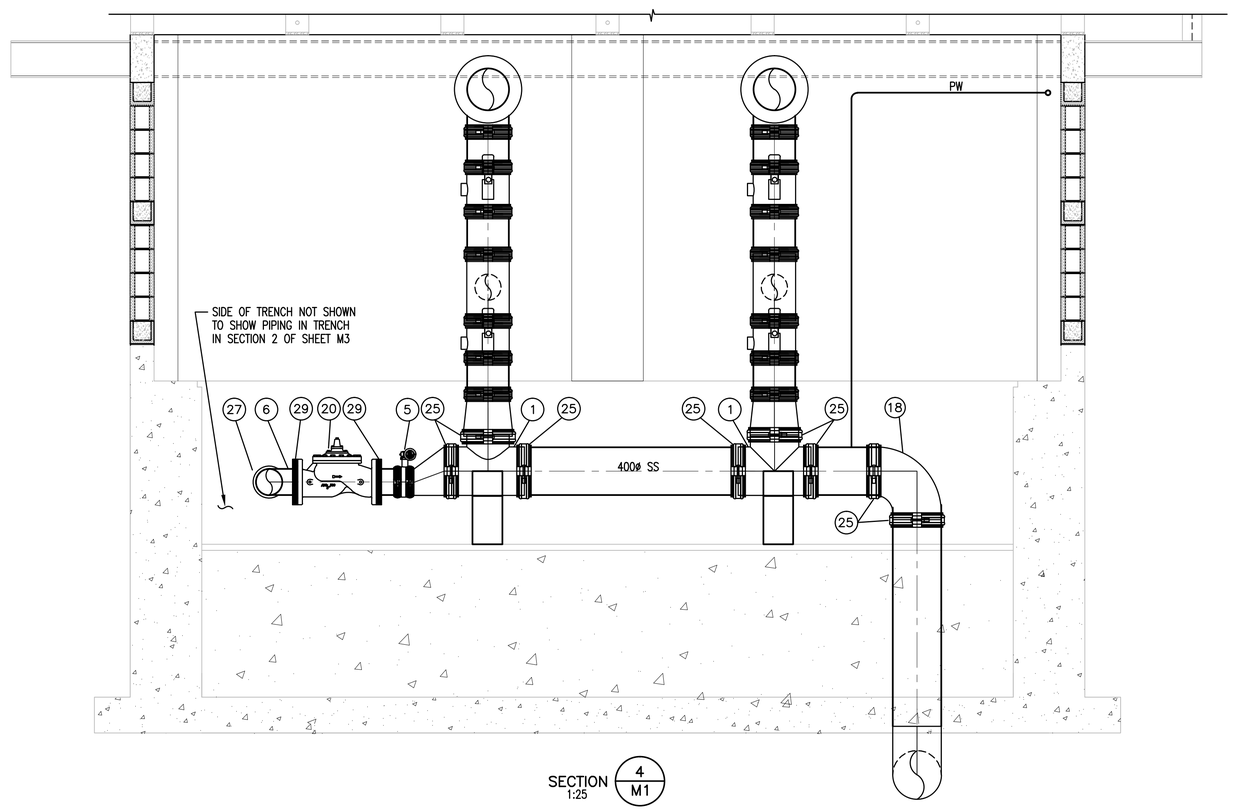

SECTION 4/M1
1:25

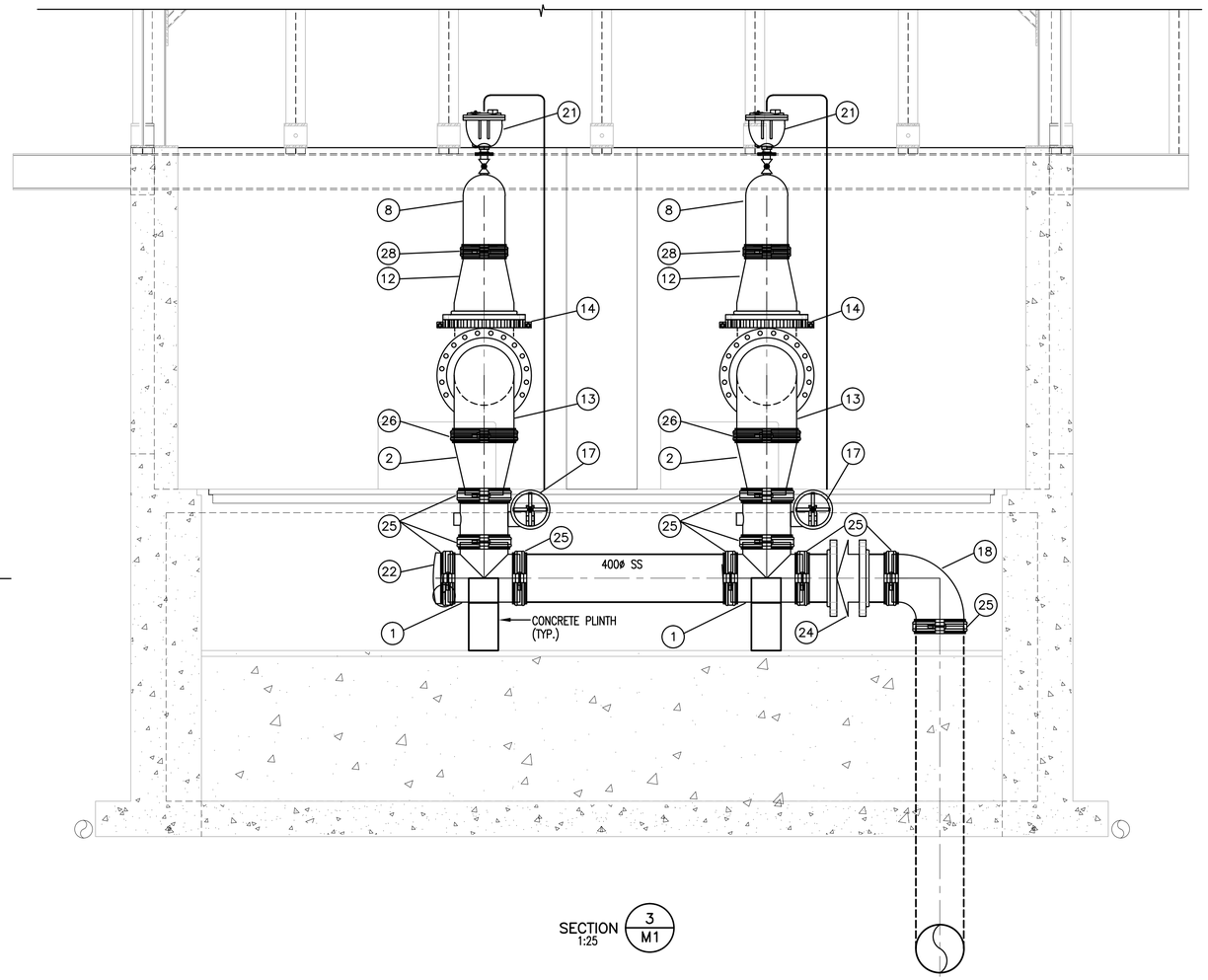

SECTION 3/M1
1:25

1. *The information in this drawing is confidential and is intended for the recipient(s) only. No other party is entitled to use or receive it. Do not redistribute. No warranty of any type is implied by provision of information through attachment of digital files.*
2. *This drawing is for general information only and may not be accurate or complete in all respects. Dayton & Knight Ltd. does not assume any responsibility for errors and/or omissions.*
3. *It is the Contractors sole responsibility to check the accuracy of the digital drawings.*

"These Record Drawings have been prepared based on information provided by the Contractor and others. Dayton & Knight Ltd. has not verified the accuracy or completeness of the information provided to them and does not warrant the accuracy or completeness of these Record Drawings. Users of these Record Drawings assume all risk of loss resulting from their use."

WHISTLER

PLOT: FULL 1:50 HALF 1:100

FILE: P:\Recdwgs\WHISTLER\179-75-3\MECHANICAL\179-75-3 M3.dwg Tab M3 11-01-17 richard

AutoCAD DRAWING

REVISIONS

ISSUE	DATE	DRAWN	CHK'D	APP'D	DESCRIPTION	ISSUE	DATE	DRAWN	CHK'D	APP'D	DESCRIPTION
A	SEP29/08	KS	EP	EP	ISSUED FOR TENDER						
B	NOV10/08	KS	EP	EP	ISSUED FOR CONSTRUCTION						
C	JUN03/10	AD	EP	EP	RECORD DRAWING						

DESIGNED EP
DRAWN KS
CHECKED EP

Dayton & Knight Ltd.
CONSULTING ENGINEERS
#210-869 HARBOURSIDE DR., NORTH VANCOUVER, B.C. V7P 3S1
TEL.: (604) 990-4800 FAX: (604) 990-4805 www.dayton-knight.com

RESORT MUNICIPALITY OF WHISTLER
21 MILE CREEK UV DISINFECTION FACILITY
SECTIONS

SCALE: AS SHOWN
DRAWING No. 179.75.3
SHEET No. M3 ISSUE C

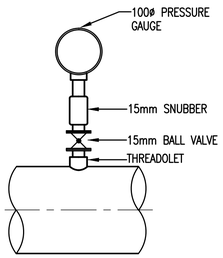

PRESSURE GAUGE CONNECTION FOR PUMP DISCHARGE

DETAIL A/M4 NTS

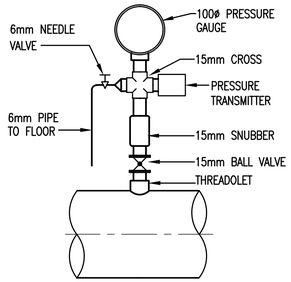

PRESSURE GAUGE AND PRESSURE TRANSMITTER CONNECTION

DETAIL B/M4 NTS

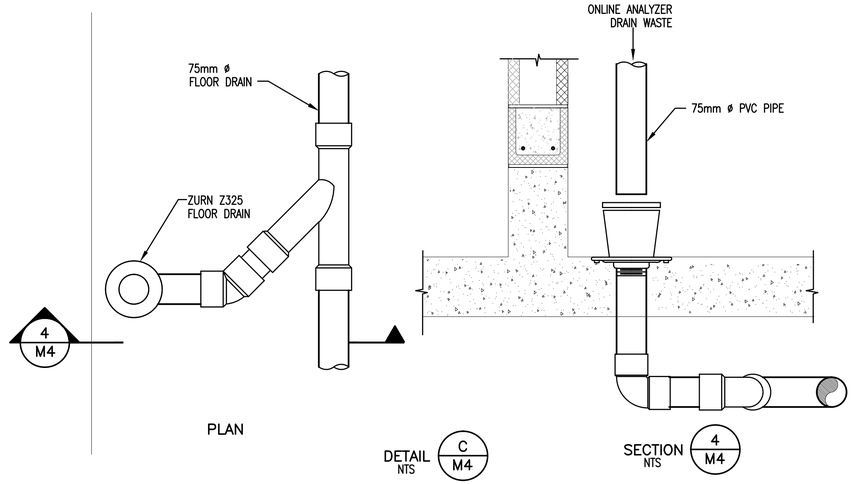

PLAN

DETAIL C/M4 NTS

SECTION 4/M4 NTS

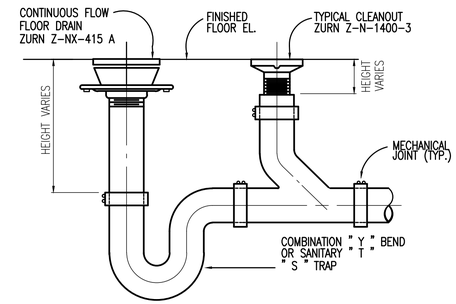

TYPICAL FLOOR DRAINS – FINISHED AREAS

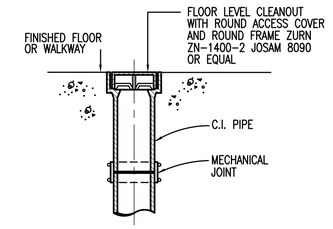

WALKWAY OR FLOOR CLEANOUT

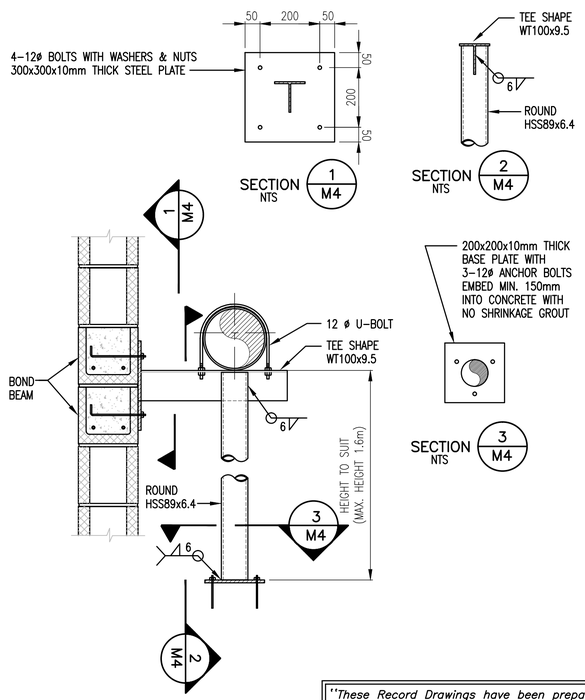

SINGLE PIPE WALL BRACKET

SYSTEM "A"

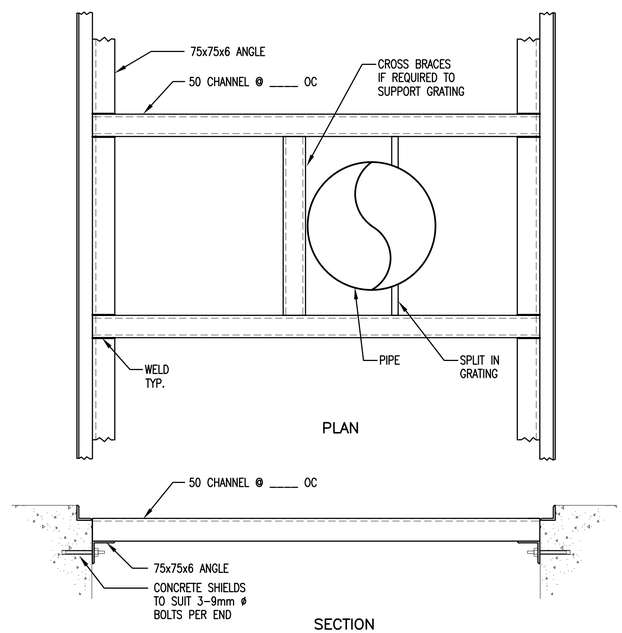

GRATING SUPPORT FRAME DETAILS

DETAIL E/M4 NTS

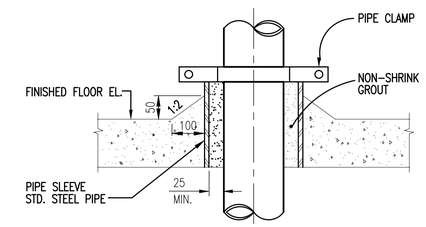

SYSTEM "D"

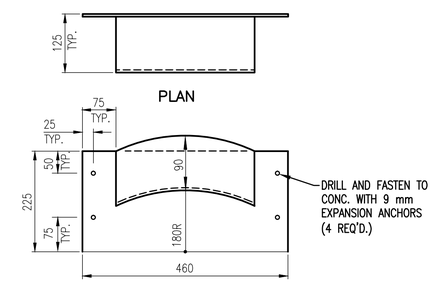

DETAIL D/M4 NTS

WALL MOUNTED HOSE RACK

NOTE:
ALL HOSE RACKS SHALL BE WELDED CONSTRUCTION FROM 6 mm PLATE, GALV'D. AFTER FABRICATION. ALL BOLTS AND NUTS SHALL BE GALV'D.

"These Record Drawings have been prepared based on information provided by the Contractor and others. Dayton & Knight Ltd. has not verified the accuracy or completeness of the information provided to them and does not warrant the accuracy or completeness of these Record Drawings. Users of these Record Drawings assume all risk of loss resulting from their use."

1. The information in this drawing is confidential and is intended for the recipient(s) only. No other party is entitled to use or receive it. Do not redistribute. No warranty of any type is implied by provision of information through attachment of digital files.
2. This drawing is for general information only and may not be accurate or complete in all respects. Dayton & Knight Ltd. does not assume any responsibility for errors and/or omissions.
3. It is the Contractors sole responsibility to check the accuracy of the digital drawings.

WHISTLER

PLOT: FULL 1:50 HALF 1:100

FILE: P:\Recdwgs\WHISTLER\179-75-3\MECHANICAL\179-75-3 M4.dwg Tab M4 11-01-17 richard

AutoCAD DRAWING

REVISIONS	ISSUE	DATE	DRAWN	CHK'D	APP'D	DESCRIPTION	ISSUE	DATE	DRAWN	CHK'D	APP'D	DESCRIPTION
	A	SEP29/08	KS	WB	WB	ISSUED FOR TENDER						
	B	NOV10/08	KS	WB	WB	ISSUED FOR CONSTRUCTION						
	C	JUN03/10	AD	WB	WB	RECORD DRAWING						

DESIGNED WB
DRAWN KS
CHECKED WB

Dayton & Knight Ltd.
CONSULTING ENGINEERS
#210-889 HARBOURSIDE DR., NORTH VANCOUVER, B.C. V7P 3S1
TEL.: (604) 990-4800 FAX: (604) 990-4805 www.dayton-knight.com

RESORT MUNICIPALITY OF WHISTLER
RAINBOW PARK PUMP STATION
MECHANICAL – DETAILS

SCALE: AS SHOWN
DRAWING No. 179.75.3
SHEET No. M4 ISSUE C

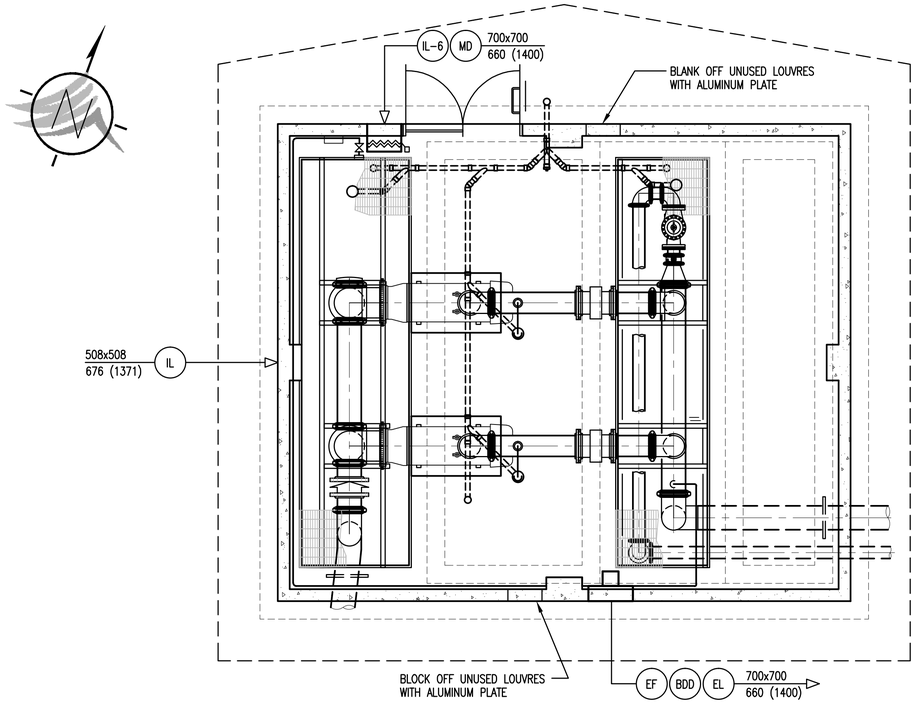

PLAN
1:50

LEGEND

- FIXED LOUVRE
- LOUVRE C/W MOTORIZED DAMPER
- AUTOMATIC GRAVITY BACK DRAFT DAMPER
- VOLUME DAMPER (ROUND DUCT, RECTANGULAR DUCT)
- ROOF MOUNTED FAN (EL./PLAN)
- RETURN DUCT
- SUPPLY DUCT
- 90 ° ELBOW IN DUCT (WITH VANES)
- 90 ° ELBOW IN DUCT (WITHOUT VANES)
- MITRE TEE WITH VANES
- SUPPLY GRILL (SIZE, CAPACITY)
- RETURN GRILL (SIZE CAPACITY)
- CANVAS CONNECTION

DG	W x H / L/S (CFM)	DOOR GRILLE
EL	W x H / L/S (CFM)	EXHAUST LOUVRE
IL	W x H / L/S (CFM)	INLET LOUVRE
RG	W x H / L/S (CFM)	RETURN GRILLE
SG	W x H / L/S (CFM)	SUPPLY GRILLE
BDD		BACK DRAFT DAMPER
EF		EXHAUST FAN
EG		EXHAUST GRILLE
MD		MOTORIZED DAMPER
SG		SUPPLY GRILLE
WG		WALL GRILLE
DG		DOOR GRILLE
RD		AIR RELIEF DAMPER
RAG		RELIEF AIR GRILLE (INTERIOR)

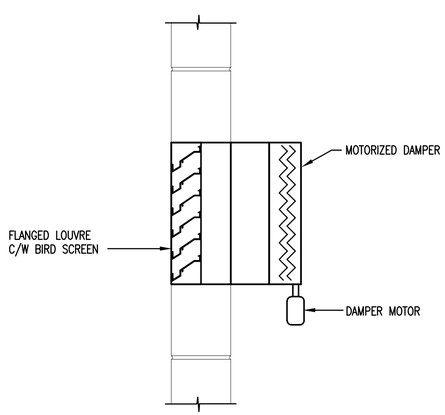

AIR INLET DETAIL
N.T.S.

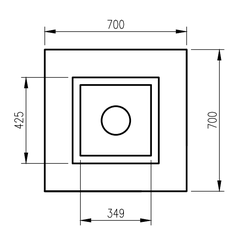

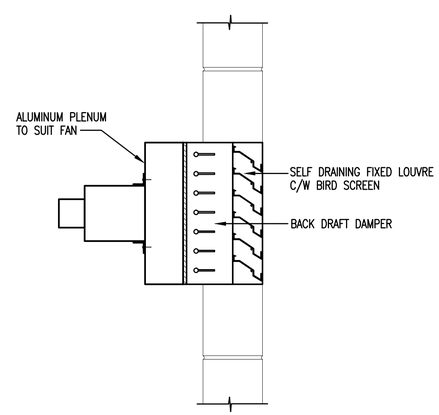

EXHAUST FAN DETAIL
N.T.S.

"These Record Drawings have been prepared based on information provided by the Contractor and others. Dayton & Knight Ltd. has not verified the accuracy or completeness of the information provided to them and does not warrant the accuracy or completeness of these Record Drawings. Users of these Record Drawings assume all risk of loss resulting from their use."

WHISTLER

PLOT: FULL 1:50 HALF 1:100

FILE: P:\Recdwgs\WHISTLER\179-75-3\HEATING\179-75-3 HV1.dwg Tab Layout1 11-01-17 richard

AutoCAD DRAWING

REVISIONS	ISSUE	DATE	DRAWN	CHK'D	APP'D	DESCRIPTION	ISSUE	DATE	DRAWN	CHK'D	APP'D	DESCRIPTION
	A	SEP29/08	KS	EP	EP	ISSUED FOR TENDER	D	JUN03/10	AD	EP	EP	RECORD DRAWING
	B	OCT14/08	DBC	EP	EP	1 ADDENDUM No.1						
	C	NOV10/08	KS	EP	EP	ISSUED FOR CONSTRUCTION						

DESIGNED EP
DRAWN KS
CHECKED EP

Dayton & Knight Ltd.
CONSULTING ENGINEERS
#210-889 HARBOURSIDE DR., NORTH VANCOUVER, B.C. V7P 3S1
TEL.: (604) 990-4800 FAX: (604) 990-4805 www.dayton-knight.com

RESORT MUNICIPALITY OF WHISTLER
21 MILE CREEK UV DISINFECTION FACILITY
HEATING AND VENTILATING – PLAN

SCALE: AS SHOWN
DRAWING No. 179.75.3
SHEET No. HV1 ISSUE D

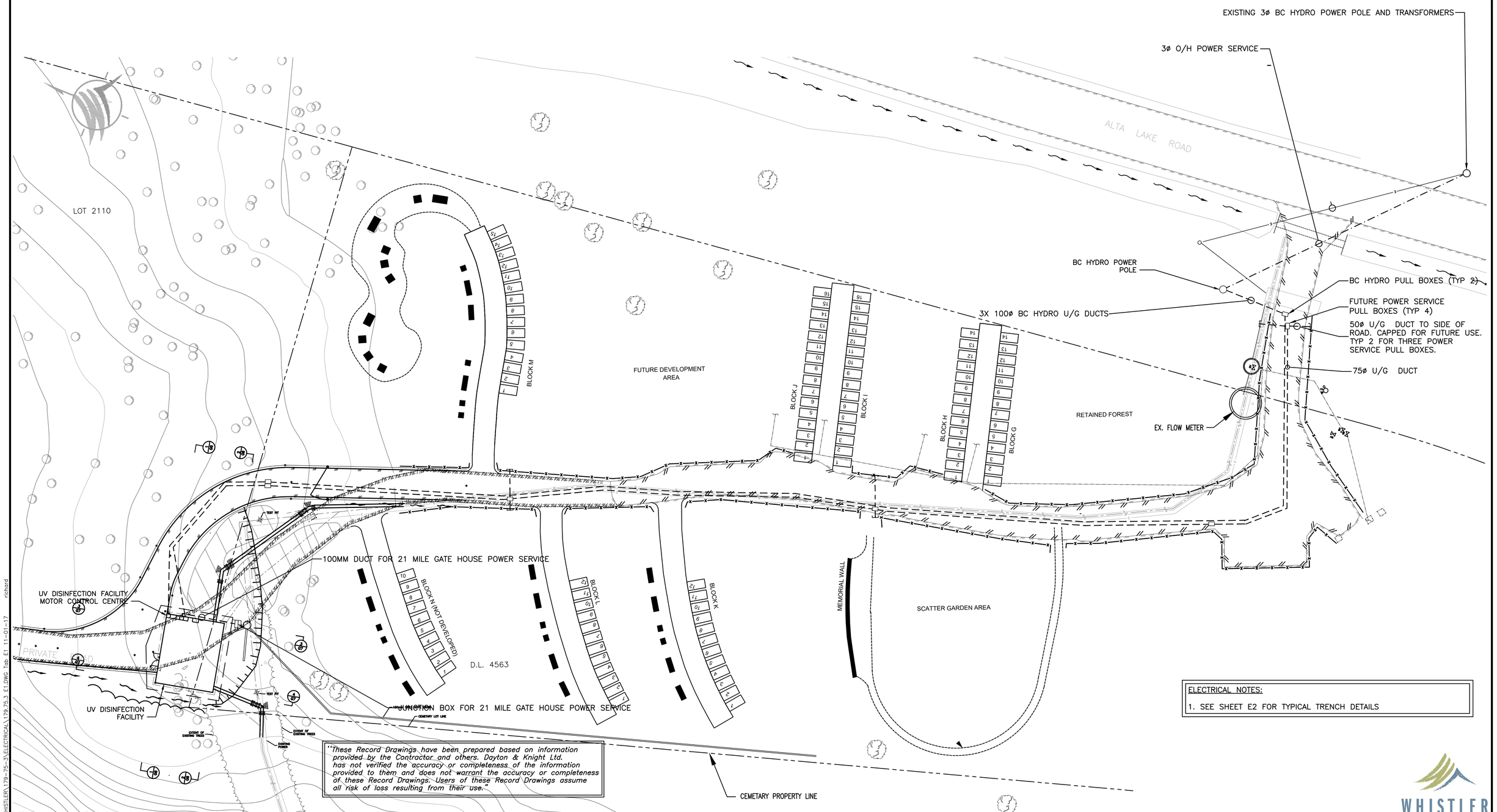

"These Record Drawings have been prepared based on information provided by the Contractor and others. Dayton & Knight Ltd. has not verified the accuracy or completeness of the information provided to them and does not warrant the accuracy or completeness of these Record Drawings. Users of these Record Drawings assume all risk of loss resulting from their use."

PLOT: FULL 1:1 HALF 1:2

FILE: P:\Recdwgs\WHISTLER\179-75-3\ELECTRICAL\179.75.3 E1.DWG Tab E1 11-01-17 richard

AutoCAD DRAWING

REVISIONS	ISSUE	DATE	DRAWN	CHK'D	APP'D	DESCRIPTION	ISSUE	DATE	DRAWN	CHK'D	APP'D	DESCRIPTION
	A	SEP29/08	MM	DR	DR	ISSUED FOR TENDER						
	B	NOV10/08	MM	DR	DR	ISSUED FOR CONSTRUCTION						
	C	JUN03/10	AD	DR	DR	RECORD DRAWING						

DESIGNED MM
DRAWN MM
CHECKED DR

Dayton & Knight Ltd.
CONSULTING ENGINEERS
#210-889 HARBOURSIDE DR., NORTH VANCOUVER, B.C. V7P 3S1
TEL.: (604) 990-4800 FAX: (604) 990-4805 www.dayton-knight.com

RESORT MUNICIPALITY OF WHISTLER
21 MILE CREEK UV DISENFECTION FACILITY
ELECTRICAL SITE LAYOUT

SCALE: 1:250
DRAWING No. 179.075.300
SHEET No. E1 ISSUE C

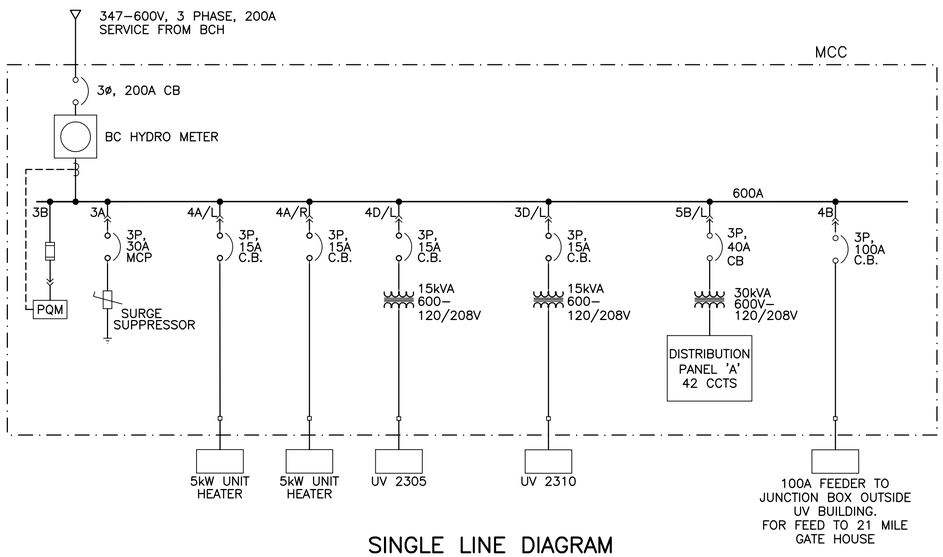

SINGLE LINE DIAGRAM

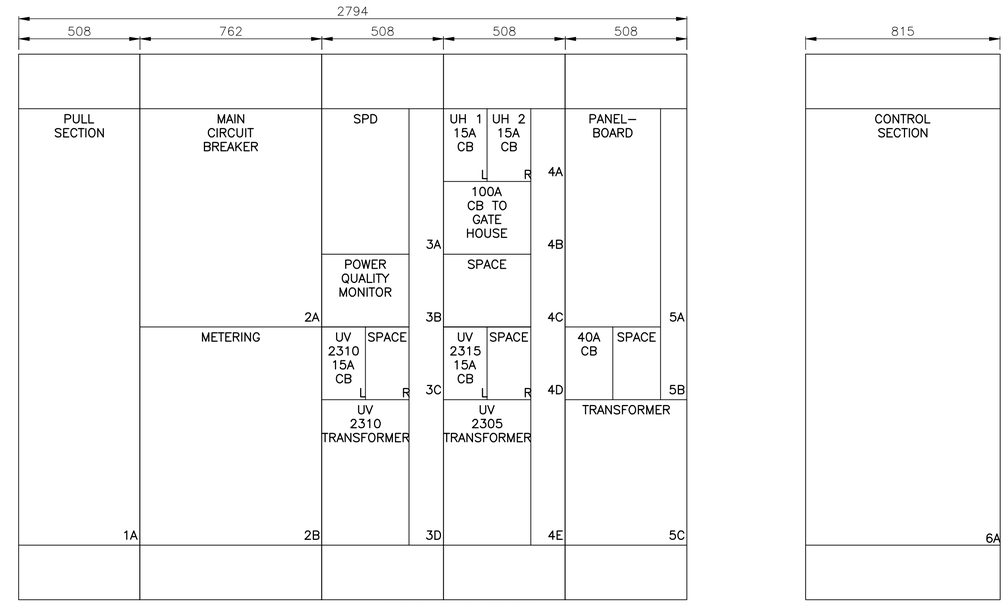

MCC ELEVATION
1:20

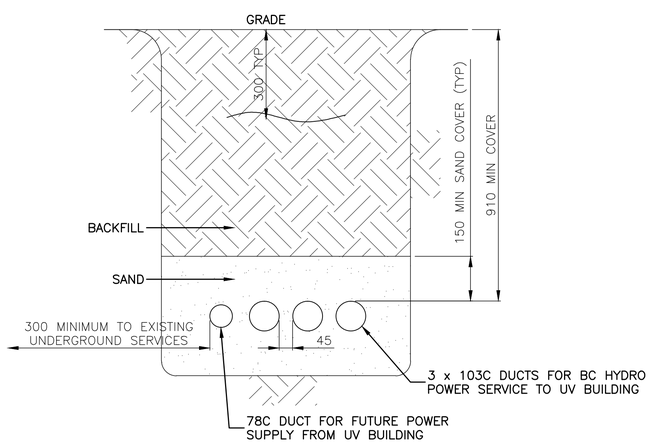

TRENCH DETAILS
N.T.S.

"These Record Drawings have been prepared based on information provided by the Contractor and others. Dayton & Knight Ltd. has not verified the accuracy or completeness of the information provided to them and does not warrant the accuracy or completeness of these Record Drawings. Users of these Record Drawings assume all risk of loss resulting from their use."

WHISTLER

PLOT: FULL 1:1 HALF 1:2

FILE: P:\Recdwgs\WHISTLER\179-75-3\ELECTRICAL\179.75.3 E2.dwg Tab E2 11-01-17 richard

AutoCAD DRAWING

REVISIONS

ISSUE	DATE	DRAWN	CHK'D	APP'D	DESCRIPTION	ISSUE	DATE	DRAWN	CHK'D	APP'D	DESCRIPTION
A	SEP29/08	MM	MM	DR	ISSUED FOR TENDER						
B	NOV11/08	MM	MM	DR	ISSUED FOR CONSTRUCTION						
C	JAN03/11	RB			RECORD DRAWING						

DESIGNED MM
DRAWN MM
CHECKED DR

Dayton & Knight Ltd.
CONSULTING ENGINEERS
#210-869 HARBOURSIDE DR., NORTH VANCOUVER, B.C. V7P 3S1
TEL.: (604) 990-4800 FAX: (604) 990-4805 www.dayton-knight.com

RESORT MUNICIPALITY OF WHISTLER
21 MILE CREEK UV DISINFECTION FACILITY
SINGLE LINE DIAGRAM & MCC LAYOUT

SCALE: AS SHOWN
DRAWING No. 179.75.3
SHEET No. E2 ISSUE C

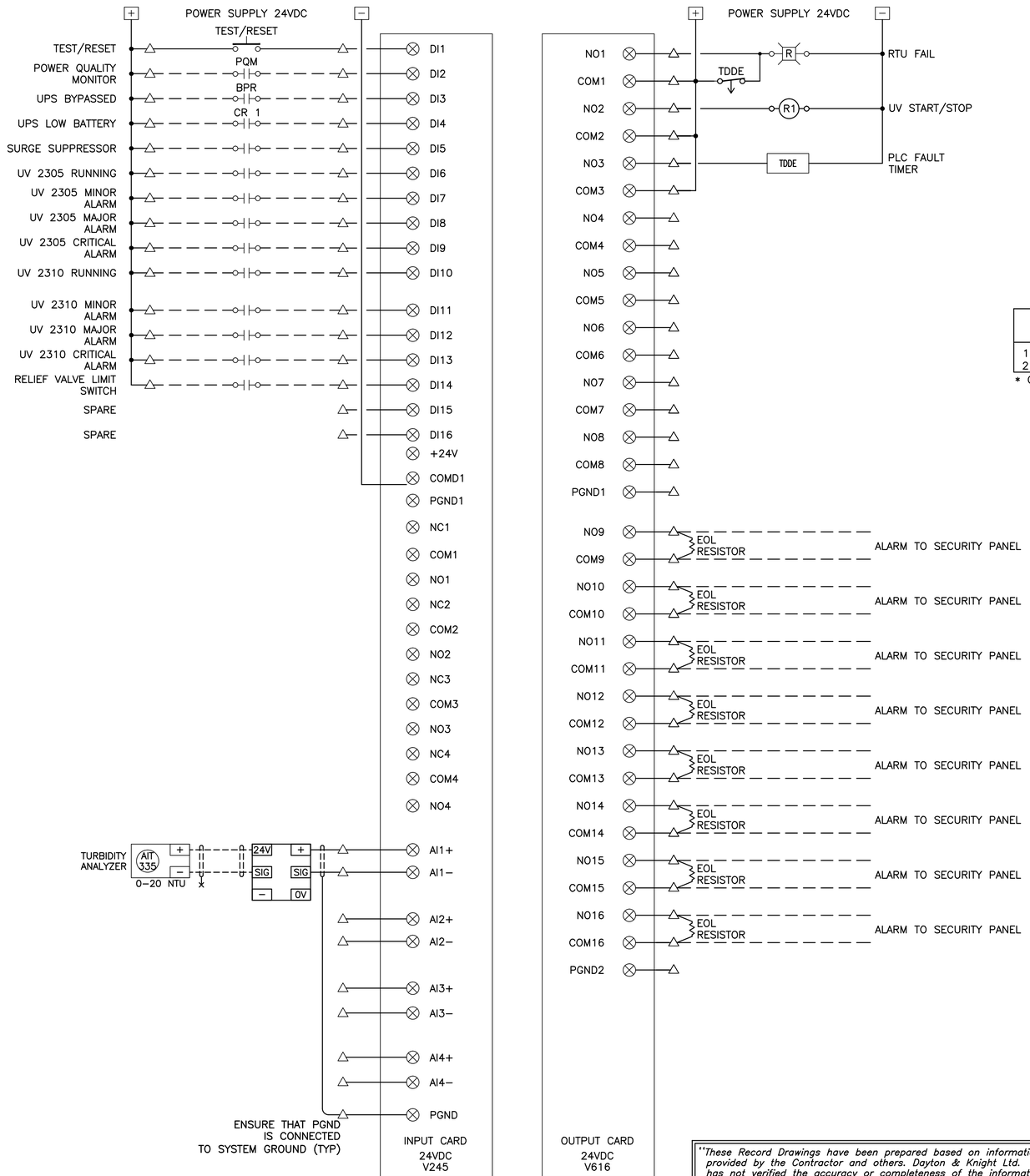

ACE RTU CONNECTIONS DIAGRAM

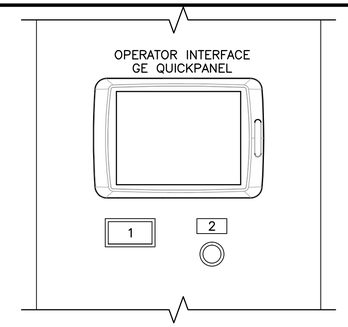

CONTROL SECTION LAYOUT

NTS

	NAMEPLATE LEGEND SCHEDULE	DEVICE
1	RTU FAIL	DISPLAY LIGHT, RED
2*	TEST/RESET	PUSHBUTTON (BLACK)

* CAN BE LABELED BY PANEL SHOP

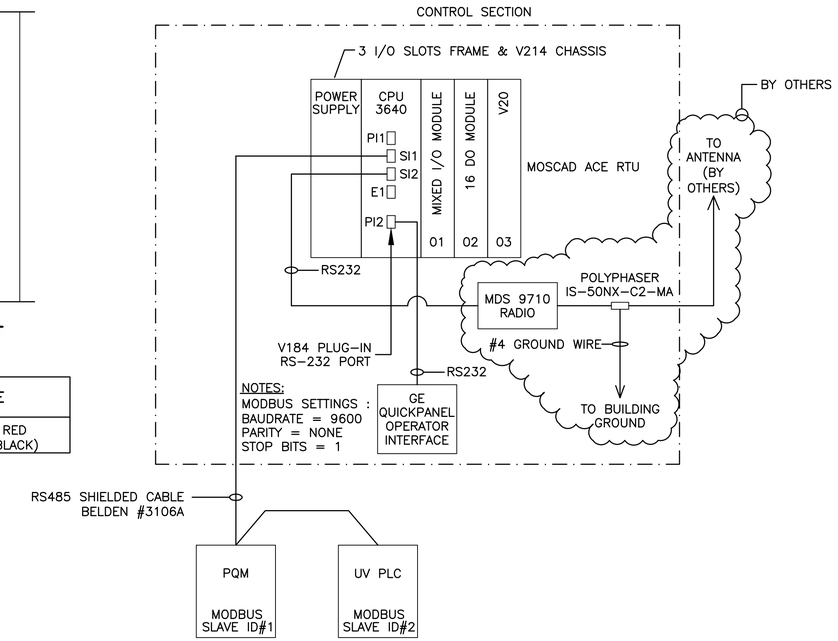

RTU LAYOUT AND COMMUNICATION NETWORK

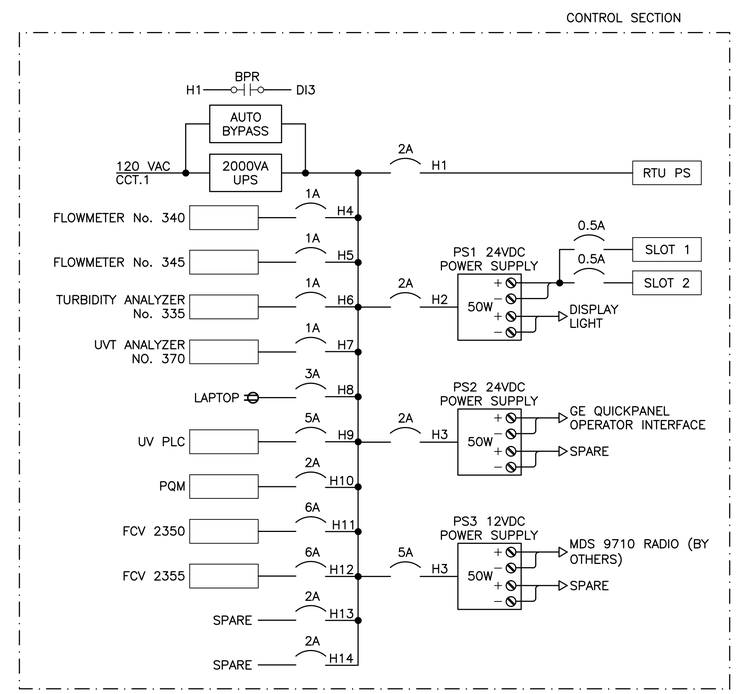

UPS AND CONTROL POWER OVERVIEW

"These Record Drawings have been prepared based on information provided by the Contractor and others. Dayton & Knight Ltd. has not verified the accuracy or completeness of the information provided to them and does not warrant the accuracy or completeness of these Record Drawings. Users of these Record Drawings assume all risk of loss resulting from their use."

WHISTLER

PLOT: FULL 1:1 HALF 1:2

FILE: P:\Recdwgs\WHISTLER\179-75-3\ELECTRICAL\179.75.3 E3.dwg Tab E3 11-01-17 richard

AutoCAD DRAWING

REVISIONS	ISSUE	DATE	DRAWN	CHK'D	APP'D	DESCRIPTION	ISSUE	DATE	DRAWN	CHK'D	APP'D	DESCRIPTION
	A	SEP29/08	MM	MM	DR	ISSUED FOR TENDER	D	JUN03/10	AD	MM	BR	RECORD DRAWING
	B	NOV10/08	MM	MM	DR	ISSUED FOR CONSTRUCTION						
	C	12FEB09	MM	MM	DR	1 REVISION NO. 1						

DESIGNED MM
DRAWN MM
CHECKED DR

Dayton & Knight Ltd.
CONSULTING ENGINEERS
#210-889 HARBOURSIDE DR., NORTH VANCOUVER, B.C. V7P 3S1
TEL.: (604) 990-4800 FAX: (604) 990-4805 www.dayton-knight.com

RESORT MUNICIPALITY OF WHISTLER
21 MILE CREEK UV DISINFECTION FACILITY
ELECTRICAL PLC I/O WIRING DIAGRAM

SCALE: AS SHOWN
DRAWING No. 179.75.3
SHEET No. E3 ISSUE D

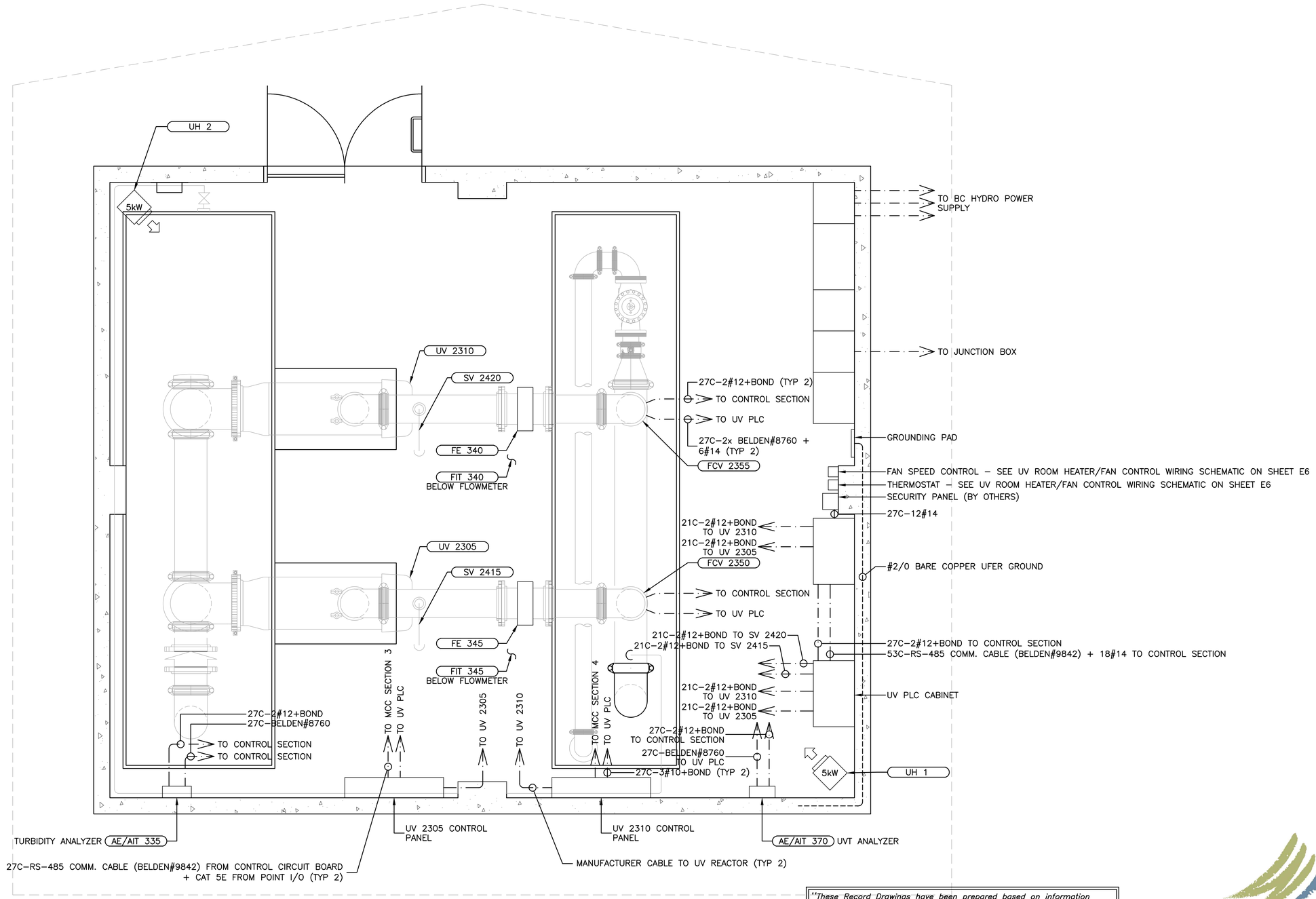

"These Record Drawings have been prepared based on information provided by the Contractor and others. Dayton & Knight Ltd. has not verified the accuracy or completeness of the information provided to them and does not warrant the accuracy or completeness of these Record Drawings. Users of these Record Drawings assume all risk of loss resulting from their use."

POWER AND CONTROL LAYOUT

1:25

WHISTLER

PLOT: FULL 1:1 HALF 1:2

FILE: P:\Recdwgs\WHISTLER\179-75-3\ELECTRICAL\179.75.3 E4_E5.dwg Tab E4 11-01-17 richard

AutoCAD DRAWING

REVISIONS	ISSUE	DATE	DRAWN	CHK'D	APP'D	DESCRIPTION	ISSUE	DATE	DRAWN	CHK'D	APP'D	DESCRIPTION
	A	SEP29/08	MM	MM	DR	ISSUED FOR TENDER	D	JUN03/10	AD	MM	DR	RECORD DRAWING
	B	NOV10/08	MM	DR	DR	ISSUED FOR CONSTRUCTION						
	C	12FEB09	MM	MM	DR	⚠1 REVISION NO. 1						

DESIGNED MM
DRAWN MM
CHECKED DR

Dayton & Knight Ltd.
CONSULTING ENGINEERS
#210-889 HARBOURSIDE DR., NORTH VANCOUVER, B.C. V7P 3S1
TEL.: (604) 990-4800 FAX: (604) 990-4805 www.dayton-knight.com

RESORT MUNICIPALITY OF WHISTLER
21 MILE CREEK UV DISINFECTION FACILITY
POWER AND CONTROL LAYOUT

SCALE: 1:50
DRAWING No. 179.75.3
SHEET No. E4 ISSUE D

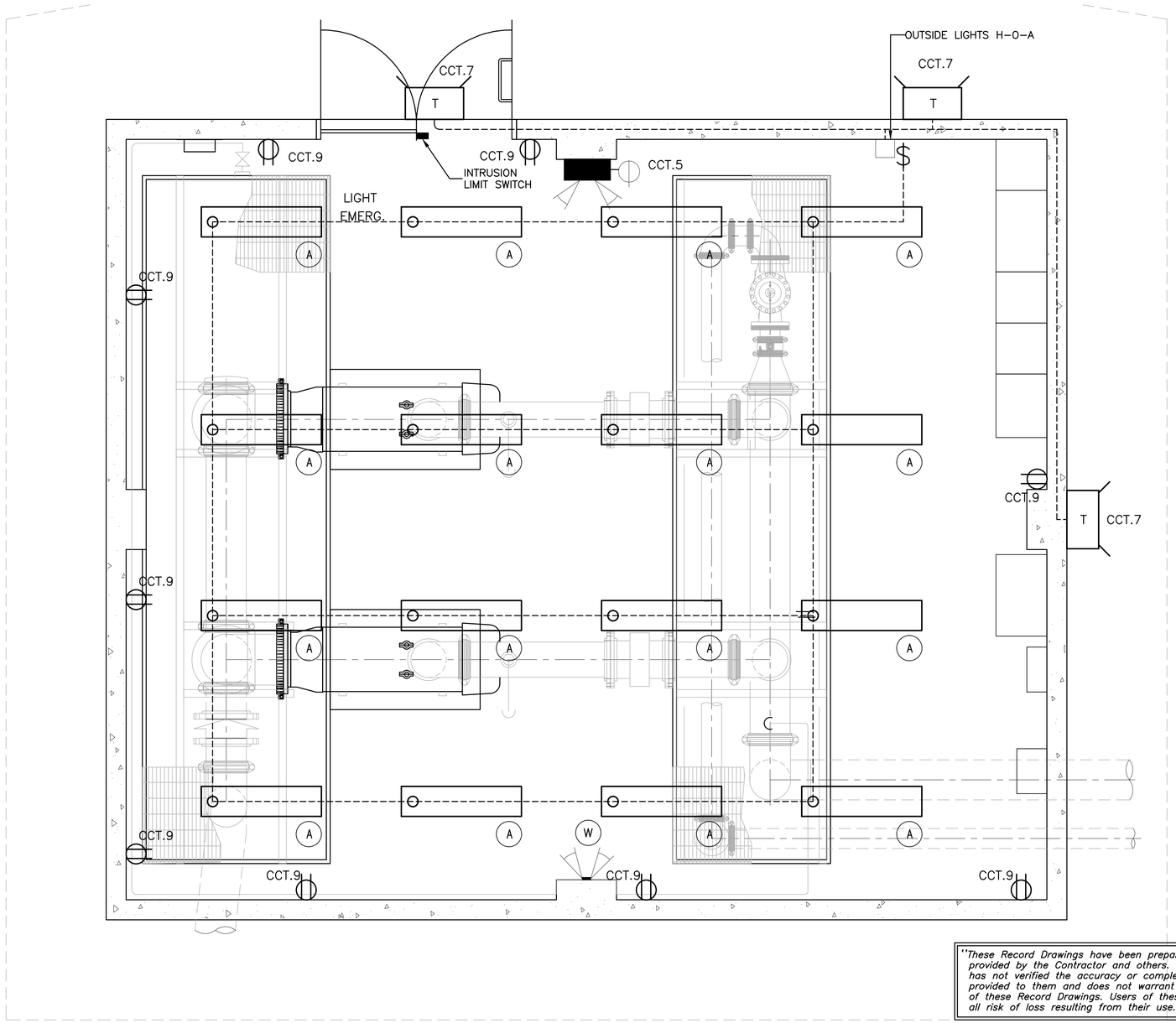

"These Record Drawings have been prepared based on information provided by the Contractor and others. Dayton & Knight Ltd. has not verified the accuracy or completeness of the information provided to them and does not warrant the accuracy or completeness of these Record Drawings. Users of these Record Drawings assume all risk of loss resulting from their use."

ELECTRICAL AND LIGHTING LAYOUT

SCALE: 1:50

WHISTLER

PLOT: FULL 1:1 HALF 1:2

FILE: P:\Recdwgs\WHISTLER\179-75-3\ELECTRICAL\179.75.3 E4_E5.dwg Tab E5 11-01-17 richard

AutoCAD DRAWING

REVISIONS

ISSUE	DATE	DRAWN	CHK'D	APP'D	DESCRIPTION	ISSUE	DATE	DRAWN	CHK'D	APP'D	DESCRIPTION
A	SEP29/08	MM	MM	DR	ISSUED FOR TENDER						
B	NOV10/08	MM	DR	DR	ISSUED FOR CONSTRUCTION						
C	JUN03/10	AD	DR	DR	RECORD DRAWING						

DESIGNED MM
DRAWN MM
CHECKED DR

Dayton & Knight Ltd.
CONSULTING ENGINEERS
#210-889 HARBOURSIDE DR., NORTH VANCOUVER, B.C. V7P 3S1
TEL.: (604) 990-4800 FAX: (604) 990-4805 www.dayton-knight.com

RESORT MUNICIPALITY OF WHISTLER
21 MILE CREEK UV DISINFECTION FACILITY
ELECTRICAL AND LIGHTING LAYOUT

SCALE: 1:50
DRAWING No. 179.75.3
SHEET No. E5 ISSUE C

PANEL No. A , LOCATION MCC ,

VOLTS 120/208 , PHASE THREE , WIRE FOUR , CIRCUITS 42 , FEEDER DISTRIBUTION TRANSFORMER , BREAKER BOLT–ON , BUS 225A CU , MOUNTING MCC

CIRC. No.	No. POLES	TRIP AMPS	SERVICE	Aø kVA	Bø kVA	Cø kVA	WIRE SIZE	REMARKS	CIRC. No.	No. POLES	TRIP AMPS	SERVICE	Aø kVA	Bø kVA	Cø kVA	WIRE SIZE	REMARKS
1	1	15	CONTROL POWER	4.0			#12		2	1	15	SCC CABINET	0.2			#12	
3	1	15	UV ROOM LIGHTS		1.0		#12		4	1	20	DEHIMUDIFIER		0.2		#12	
5	1	15	EMERGENCY LIGHTING			0.5	#12		6	1	15	SPARE			0.2	#12	
7	1	15	OUTDOOR LIGHTS	0.5			#12		8	1	15	SPARE	0.2			#12	
9	1	15	UV BUILDING RECEPTACLES		1.0		#12		10	1	15	SPARE		0.2		#12	
11	1	15	UV BUILDING HEATER/FAN CONTROL			0.5	#12		12	1	15	SPARE			0.2	#12	
13	1	15	SPARE	0.1			#12		14	1	15	SPARE	0.2			#12	
15	1	15	SPARE		0.1		#12		16			SPACE					
17	1	15	SPARE			0.1	#12		18			SPACE					
19	1	15	SPARE	0.1			#12		20			SPACE					
21	1	15	SPARE		0.1		#12		22			SPACE					
23	1	15	SPARE			0.1	#12		24			SPACE					
25	1	15	SPACE	0.1			#12		26			SPACE					
27			SPACE						28			SPACE					
29			SPACE						30			SPACE					
31			SPACE						32			SPACE					
33			SPACE						34			SPACE					
35			SPACE						36			SPACE					
37			SPACE						38			SPACE					
39			SPACE						40			SPACE					
41			SPACE						42			SPACE					
			SUB–TOTAL	2.7	2.2	1.2						SUB–TOTAL	0.6	0.4	0.4		
												TOTAL	5.3	2.6	1.6		

DISTRIBUTION PANEL SCHEDULE

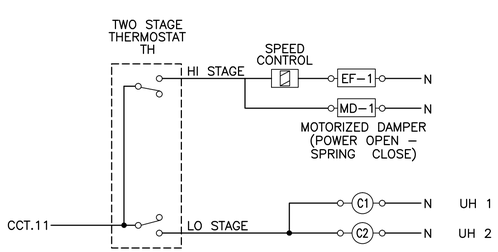

UV ROOM HEATER/FAN CONTROL

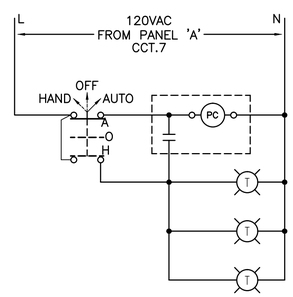

OUTSIDE LIGHT CONTROL

"These Record Drawings have been prepared based on information provided by the Contractor and others. Dayton & Knight Ltd. has not verified the accuracy or completeness of the information provided to them and does not warrant the accuracy or completeness of these Record Drawings. Users of these Record Drawings assume all risk of loss resulting from their use."

WHISTLER

PLOT: FULL 1:1 HALF 1:2

FILE: P:\Recdwgs\WHISTLER\179-75-3\ELECTRICAL\179.75.3 E6.dwg Tab E6 11-01-17 richard

AutoCAD DRAWING

REVISIONS	ISSUE	DATE	DRAWN	CHK'D	APP'D	DESCRIPTION	ISSUE	DATE	DRAWN	CHK'D	APP'D	DESCRIPTION
	A	SEP29/08	MM	MM	DR	ISSUED FOR TENDER	D	JUN03/10	AD	MM	BR	RECORD DRAWING
	B	NOV10/08	MM	MM	DR	ISSUED FOR CONSTRUCTION						
	C	12FEB09	MM	MM	DR	1 REVISION NO. 1						

DESIGNED MM
DRAWN MM
CHECKED DR

Dayton & Knight Ltd.
CONSULTING ENGINEERS
#210-869 HARBOURSIDE DR., NORTH VANCOUVER, B.C. V7P 3S1
TEL.: (604) 990-4800 FAX: (604) 990-4805 www.dayton-knight.com

RESORT MUNICIPALITY OF WHISTLER
21 MILE CREEK UV DISINFECTION FACILITY
DISTRIBUTION PANEL SCHEDULE AND MISCELLANEOUS DETAILS

SCALE: N.T.S.
DRAWING No. 179.75.3
SHEET No. E6 ISSUE D